NO. 34 NOTES FROM THE SHOP $2.50

# Woodsmith®

Woodsmith®

**Number 34** **Jul/Aug, 1984**

Editor
**Donald B. Peschke**

Design Director
**Ted Kralicek**

Assistant Editor
**Steve Krohmer**

Art Director
**Kay Mulder**

Technical Illustrators
**David Kreyling**
**Mike Henry**

Subscription Manager
**Sandy J. Baum**

Subscription Assistants
**Christel Miner**
**Vicky Robinson**
**Jackie Stroud**
**Shirley Feltman**
**Ann Williams**
**Diana Starr**

Computer Operations
**Ken Miner**

Circulation Manager
**Jeff Farris**

Administrative Assistant
**Cheryl Scott**

Building Maintenance
**Archie Krause**

**WOODSMITH** (ISSN 0164-4114) is published bimonthly (January, March, May, July, September, November) by Woodsmith Publishing Co., 2200 Grand Ave., Des Moines, Iowa 50312.
**WOODSMITH** is a registered trademark of the Woodsmith Publishing Co.
©**Copyright 1984** by Woodsmith Publishing Co. All Rights Reserved.
**Subscriptions:** One year (6 issues) $10, Two years (12 issues) $18. Single copy price, $2.50 (Canada and Foreign: add $2 per year.)
**Change Of Address:** Please be sure to include both your old and new address and a mailing label from a recent issue.
**Second class postage paid** at Des Moines, Iowa.
**Postmaster:** Send change of address notice, Form 3579, to Woodsmith Publishing Co., 2200 Grand Ave., Des Moines, Iowa 50312.

**BACK ISSUES**

A list of the contents of all back issues appears on the wrapper of this issue. If the wrapper is missing, you can send for a booklet describing the contents and prices of all back issues.

**SAMPLE COPIES**

If you have a friend who would like to see a copy of **Woodsmith**, just send the name and address, and we'll send a sample (at no cost).

# Sawdust

**ABOUT THIS ISSUE.** As the years go by, I'm becoming more and more fascinated with the details of cabinetmaking. In fact, this fascination has changed my whole approach to some aspects I used to dread. Building drawers, for example.

Building a drawer is not an easy task. A drawer has to be strong, it has to fit a certain opening in the cabinet, and it has to operate smoothly. This requires a lot of planning, and it means a lot of details have to be worked out so the drawers and the cabinet work together.

The more cabinets and the more drawers I build, the more I've come to realize that I'm not just building the same basic drawer over and over again. With each new cabinet, comes new drawers with their own problems and design challenges.

In fact, as I was looking back in the past issues of *Woodsmith*, I realized that no two drawers were built the same way. That's a lot of different ways to build drawers.

Question: So why are you going on and on about drawers? It sounds like you're trying to make a point. What is it?

If you're going to build a cabinet with a drawer in it, you have to plan ahead. Take the chest of drawers shown in this issue for example.

There's no way to build this chest without first knowing exactly how the drawers will be constructed and mounted. Which means you have to design the chest from the inside out.

The interdependence of the drawers and the chest involves dozens of details that have to be worked out. Like a game of chess, each detail determines the ones that follow and have to be planned well in advance.

**METAL OR WOOD?** Among the details for the design of the drawers, one decision was critical for determining the overall approach for building the chest.

I wanted to build drawers without using any hardware. No drawer pulls. No metal guide system. This decision was based on a little quirk that most woodworkers have: if given a choice they'll figure out a way to use wood rather than metal — no matter how much more work it involves.

True, by avoiding metal hardware there's a little extra work and a lot more planning. But it makes the whole project an interesting design challenge . . . and certainly more interesting to build.

The result is a chest with drawers that are a pure pleasure to open. As you open each drawer, your finger-tips fit comfortably in the coves on the bottom edge of the drawer front. Then as the drawer slides open, you immediately feel the silky smooth action of the wooden guides. All that extra work to make wooden guides quickly melts into pure satisfaction. You nod and say, "That feels just right."

**CHANGES.** Along with the chest of drawers, we also built a night stand, a wall mirror and a headboard. These four projects represent the first time we've shown a group of pieces with the same design and intended to be used as a set.

However, as we were working on the design, one thing became clear: There is no way to please everyone.

The chest of drawers was the first piece we built. As soon as it was complete, the suggestions began. "It's nice but it should be wider . . . it really needs two small drawers at the top . . . it should have one or maybe two more large drawers . . . it should be built out of oak instead of mahogany.

All of these are legitimate suggestions. And any of them could easily be incorporated into the chest without much trouble at all.

In fact, that's why we show as many of details for building each project as we can — in hopes that you don't follow them. By that I mean that we include all the details about a project to provide enough information so you can change the design to suit your needs. Add another large drawer. Or two small ones.

One change that's easy to make and can produce dramatic results is to build these projects out of a different wood. We used mahogany, but think of the difference in appearance if the chest were built out of oak, with rift sawn pieces for the drawer fronts. Or maple with spalted maple drawer fronts. Or the headboard had a burled veneer on the center panel.

Feel free to change the design, the wood, the dimensions. Change it and make it your own.

**MORE TALK.** With this issue we decided to increase the Talking Shop section so we could include more comments from readers and expand the question-and-answer format.

If you have a comment or question, please feel free to send it in. We're anxious to hear from you, and we hope this exchange information and ideas will benefit all of us.

**NEW FACES.** Diana Starr has joined us to help open, sort and process the volume of mail we receive each day. She will also be working on the other end: packing and sending out the orders for back issues.

**NEXT MAILING.** The September/October issue of *Woodsmith* (No. 35) will be mailed during the week of September 24, 1984.

# Tips & Techniques

### A NEW TWIST

In *Woodsmith* No. 33, you complained about the problems of loading paper in palm sanders. There's a simple trick that will alleviate about 99% of the problem, and all you need is an ordinary pencil.

After cutting the paper to size, lay the paper abrasive side down. Then lay the pencil on one of the edges that will be clamped in the sander, and roll the edge of the sandpaper around the pencil.

When the paper is released, it will spring back with a nice semi-circular upward curve on the edge. Then curl the opposite edge of the sandpaper.

To load the sandpaper, simply raise the clamp spring and insert the first curved edge of the paper. Smooth the paper across

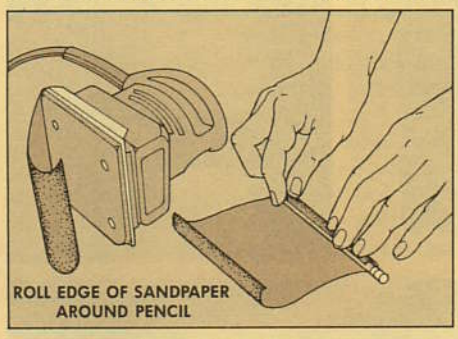


the pad and you'll find the other edge curling around the pad, pointing directly where the clamp will open. Raise the clamp and push in the edge. Then tighten the paper across the pad, and release the clamp.

*Samuel Hathaway*
*Sudbury, Massachusetts*

### A HOT TIP

I read the article in *Woodsmith* No. 33 on sharpening tools with a stationary disk and belt sander. This does work well, but . . .

Please tell your readers to be sure that all the sawdust is removed from the sander before it's used to sharpen tools. The metal sparks from the grinding action can start the sawdust on fire.

*J. R. Hackenberry*
*Saegertown, Pennsylvania*

### DRILLING DOWELS

In *Woodsmith* No. 33, you showed a method of marking the center point on the end of long dowels that works well. For short dowels, I use a slightly different method that not only finds center, but also assures the hole is drilled parallel with the sides of the dowel.

First, clamp a piece of scrap stock to the table of the drill press, and drill a hole that's exactly the same diameter as the outside diameter of the dowel. I drill this hole about two-thirds the way through the thickness of the block.

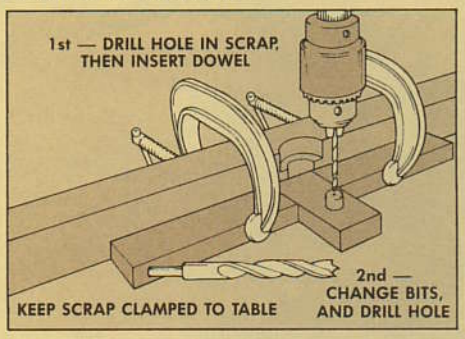


Then keeping the block clamped to the drill press table, remove the bit from the chuck and insert the dowel in the hole. By keeping the block clamped in its original position, the drill press chuck is automatically centered over the short dowel.

Drilling a hole that's perfectly centered on the end of the dowel simply requires chucking the correct size drill bit in the drill press, and drilling the dowel.

*Patrick Warner*
*Escondido, California*

### FIBERGLASS SCREEN

I'd like to share an idea I have for the Sears routers. In *Woodsmith* No. 31 and other issues, you've mentioned that debris falling into the Sears router may have been one of the causes for the fan blades breaking off, and damaging the motor.

I too own a Sears 1½ H.P. router that's mounted upside down on a router table. But before I mounted it on the router

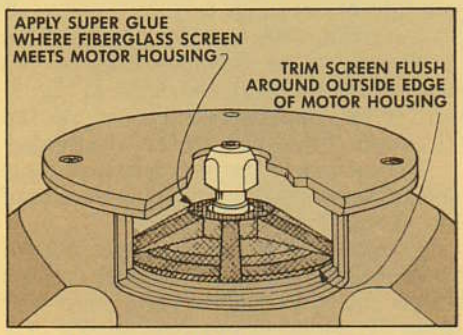


table, I protected the motor with a small piece of fiberglass screen that covered the air intake directly above the fan.

To attach the screen to the motor housing, apply a small amount of super glue where the screen and the motor housing come in contact with each other.

The advantage to this system is that the screen in no way effects the air flow from the fan, yet it prevents large debris from falling into the router. I've used my router this way for 1½ years, and have had no problems.

*Steven Johnson*
*Des Moines, Iowa*

### SCRAP WOOD CORNER CLAMPS

Not too long ago, I had to make a large number of Lazy Susan shelves. Everything went together just fine until I realized I was producing a mountain of cut-off corners that were taking over my shop. I hated the thought of feeding all those cut off's into my wood heater, so I decided to come up with some way to use the scraps.

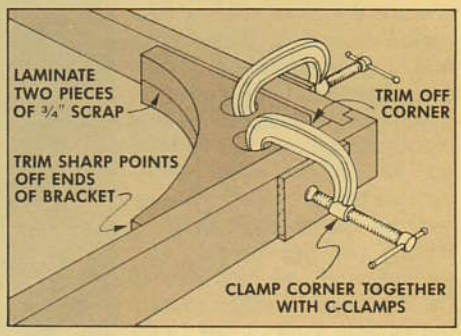


Finally, I came on the idea of combining the corner cut-offs with two C-clamps to form a corner clamp. The corner clamps can be used to square up case work, or to just clamp together the corners on a mitered frame.

To make the clamps, I glued two of the ¾" thick corner cut-offs together to produce a 1½" thick bracket. Then I bored two holes for the C-clamp pads, and cut off the sharp corners on the ends of the bracket.

Finally, the edges are trimmed and sanded so they're smooth and perfectly square. (If the stock used for the lazy susan is square to begin with, having to square the clamps can be eliminated.)

*Perry Hanson*
*Walhalla, North Dakota*

### SEND IN YOUR IDEAS

If you'd like to share a woodworking tip with other readers of *Woodsmith*, send your idea to: *Woodsmith*, Tips & Techniques, 2200 Grand Ave., Des Moines, Iowa 50312.

We pay a minimum of $10 for tips, and $15 or more for special techniques (that are accepted for publication). Please give a complete explanation of your idea. If a sketch is needed, send it along; we'll draw a new one.

# Bachelor's Chest

## CLEAN, CONTEMPORARY FOUR-DRAWER CHEST

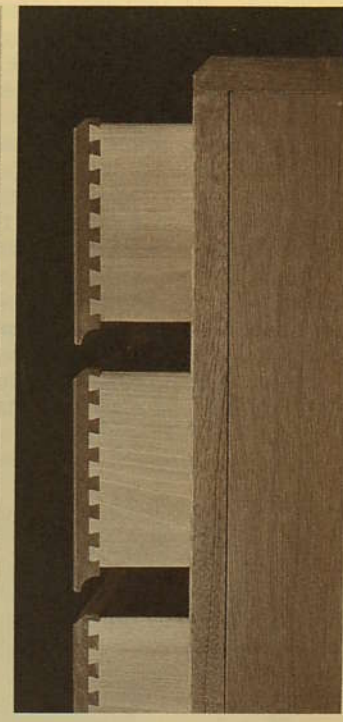

This chest of drawers is built exactly the opposite of the way it was designed. That may not make much sense, but that's one of the problems you face when you set out to build a chest of drawers — you have to design the drawers first and then design the cabinet around them.

This is especially true of this chest because we wanted to build it with drawers that are a little out of the ordinary. There's no hardware on the drawers — no pulls, no metal guides. Instead, these drawers are designed with a concealed cove as a finger pull, and a guide system that's made completely of wood.

In order to make all of this work, the cabinet has to take into account the coved lip design on the drawer fronts, as well as the method used to mount the drawers in the cabinet, and the final size of the drawers. In other words, the cabinet is designed to fit the drawers.

These design considerations are discussed in more detail in the article on building drawers that begins on page 13. Once the drawers are designed and final measurements are determined for the cabinet, I started work by building the two sides of the cabinet.

### THE CABINET SIDES

The sides of the chest consist of plywood panels with hardwood edging on the front and back edges, see Fig. 1. The plywood panels also have a series of ¼" grooves routed on the inside face for the cabinet's web frames. (These frames are used to connect the cabinet sides, and they also support the drawers.)

**CUT SIDES.** The first step is to cut the plywood panels (A) to size. The length of these panels is determined by the spacing needed for the drawers and the web frames. This works out to 32¹⁵⁄₁₆". (The details of this measurement are discussed in the drawer article on page 13.)

As for the width of the plywood panels, they should be 16⅛" wide. However, rather than cutting the plywood to this width, I cut it a little more than double-wide (32½") so I could rout the grooves for the web frames in one pass, see Fig. 2. This assures the grooves are routed in the same position on both sides.

**ROUT GROOVES.** To rout the grooves, clamp an auxiliary fence to the plywood and use a hand-held router with a ¼" straight bit, see Fig. 2.

I started with the top groove. This groove should be ¹³⁄₁₆" down from the top edge of the plywood, see detail in Fig. 2. (Alter this measurement to equal the thickness of the stock for the web frame.)

The position of the next four grooves is critical because they determine the size of the openings for the drawers.

To produce the correct height for the drawer openings, rout these four grooves so they're exactly 7⅝" apart, measuring from the top of each groove, see Fig. 1.

After the grooves are routed, rip the double-wide panel in half and trim it to form two panels, each 16⅛" wide.

**ROUT TONGUES.** The next step is to rout tongues on the front, back, and top edges of each plywood panel. The tongues on the front and back edges are used to attach hardwood edging strips, see Figs. 4 and 5. The tongue on the top edge is used later to attach the top panel.

These tongues will fit into grooves that are routed in the edging strips. To gauge the thickness of the tongues, first rout a groove in a test piece with a ¼" straight bit. Then the tongues are cut on a router table to fit this groove.

Set up the router table with a ⅜" straight bit to rout ¼"-wide rabbets on both faces of the plywood to produce the ¼"-long tongues, see Fig. 3. Adjust the depth of cut until the thickness of the tongue fits the groove in the test piece.

**DECORATIVE SHOULDER.** After the tongues are cut, I added a ¹⁄₁₆"-wide shoulder on the front, back, and top edges of the plywood to set off the panel in the frame,

see Figs. 4 and 5. Rout this shoulder 1/16" wide and 1/8" deep on the outside face of the plywood panels, see Fig. 3.

### THE EDGING STRIPS

Now the solid-wood edging strips can be added to the front and back edges of the plywood sides. All of these strips are cut from 5/4 stock (1 1/16" thick actual).

**BACK EDGING.** The back edging strips (C), are ripped to width so they're just slightly (1/32") wider than the thickness of the plywood sides, see Cross Section in Fig. 1. This extra width provides just enough material so the surface of the strips can be planed and sanded down perfectly flush with the plywood.

Then these strips are cut to length so they're equal to the distance from the bottom of the plywood panel to the shoulder of the tongue on the top edge, see Fig. 1.

**ROUT GROOVE.** After the strips are cut to size, rout a 1/4" x 1/4" groove on the edge of the strip to match the tongue on the back edge of the plywood panel, see Fig. 1. I routed this groove on the router table, making sure it was positioned so the extra 1/32" in width was sticking up above the *outside* face of the plywood.

**RABBET FOR BACK.** Also, cut a 5/16"-wide by 1/4"-deep rabbet on the back edge of the edging strip for the 1/4" plywood back, see Fig. 5. Shop Note: I used a table saw rather than the router table to cut this rabbet because the saw produces a cleaner edge along the shoulder of the rabbet.

**FRONT EDGING.** The front edging strip (B) is ripped 1 5/8" wide and cut to the same length as the back strip, see Fig. 4. Then a 1/4" x 1/4" groove is routed on the inside face to fit the tongue on the front edge of the plywood panel, see Fig. 1.

This groove is positioned exactly the same distance from the outside edge as the groove on the back edging strip. (That is, so the edge is 1/32" above the surface of the plywood.) Since this groove is in exactly the same position, it can be cut using the same set-up on the router table.

**ASSEMBLY.** Finally, glue the edging strips to the tongues on the plywood. Be sure the top end of each edging strip is flush with the shoulder of the tongue on the top edge of the side, see Figs 4 and 5.

FIGURE 1

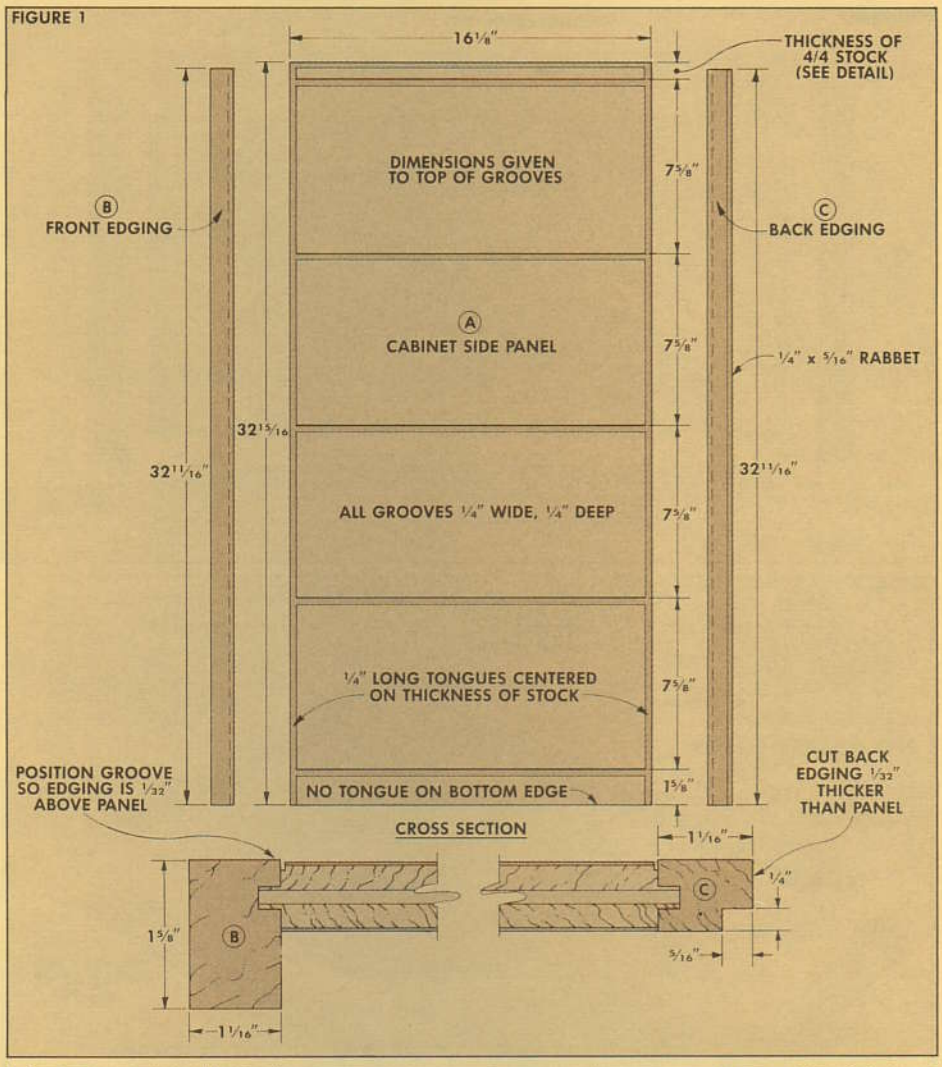


FIGURE 2

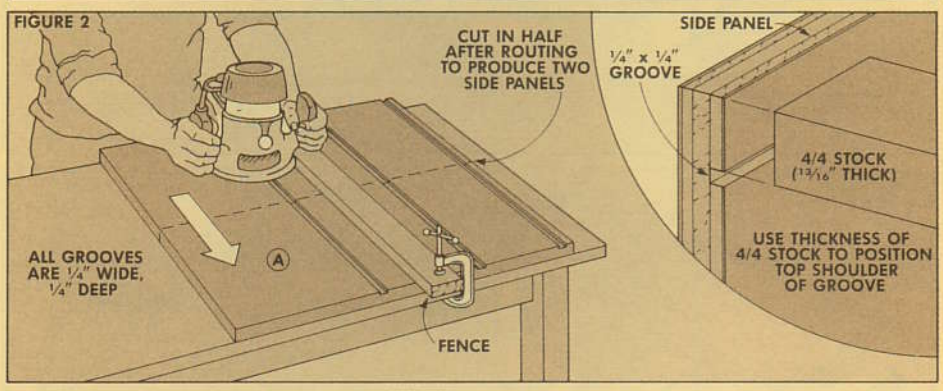


FIGURE 3

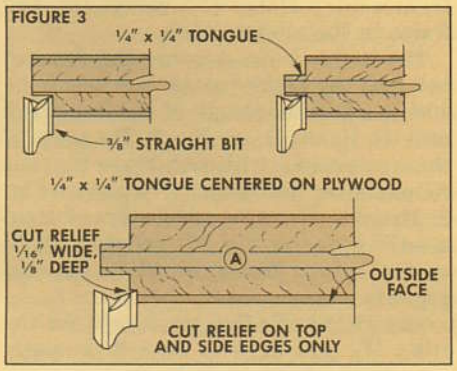


FIGURE 4

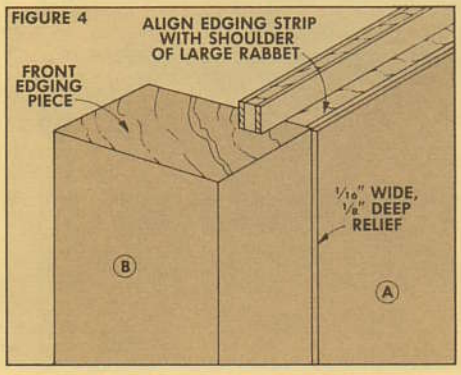


FIGURE 5

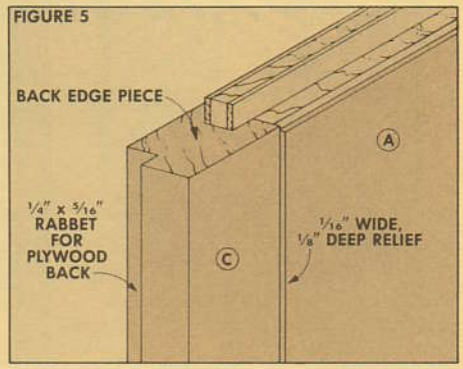

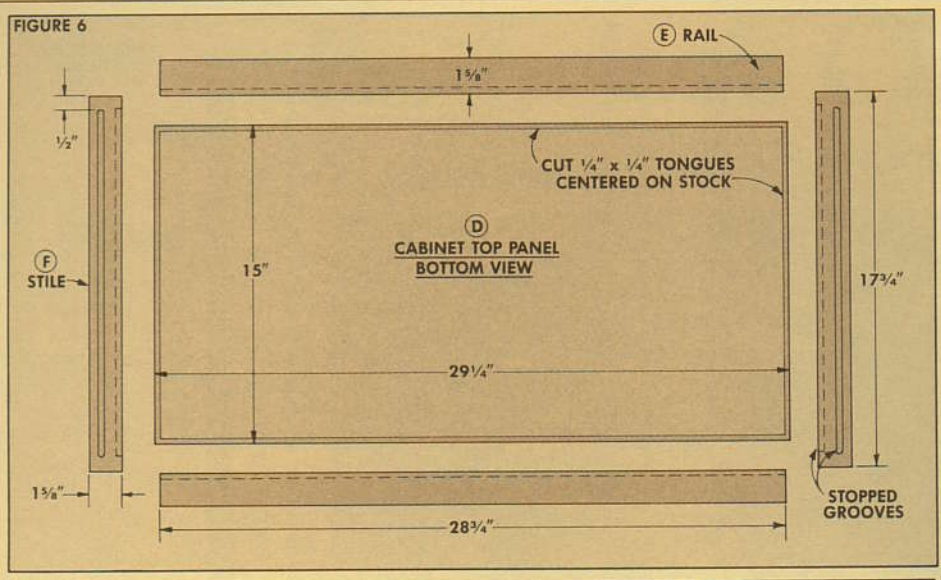


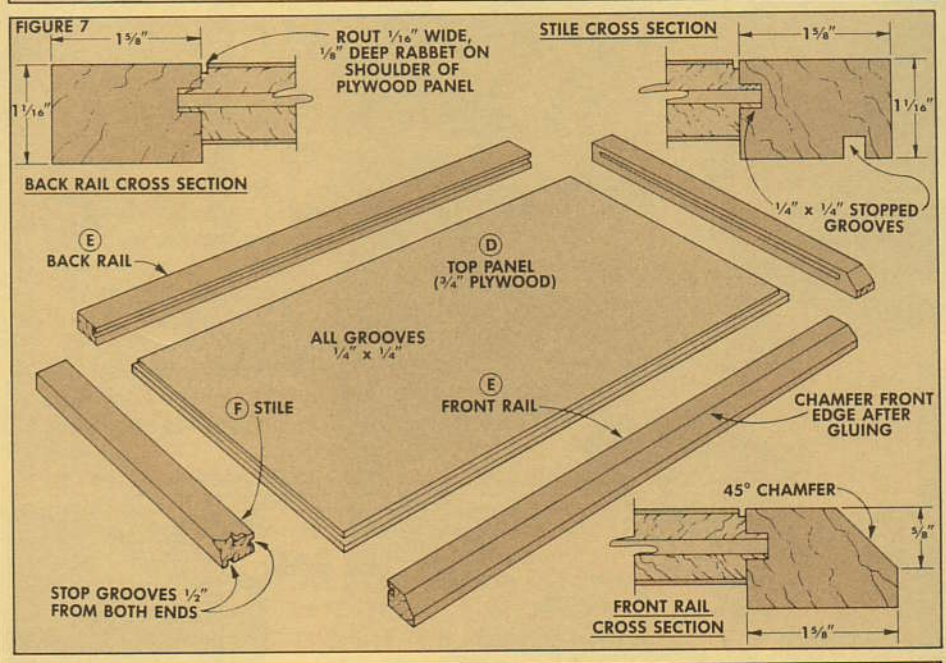


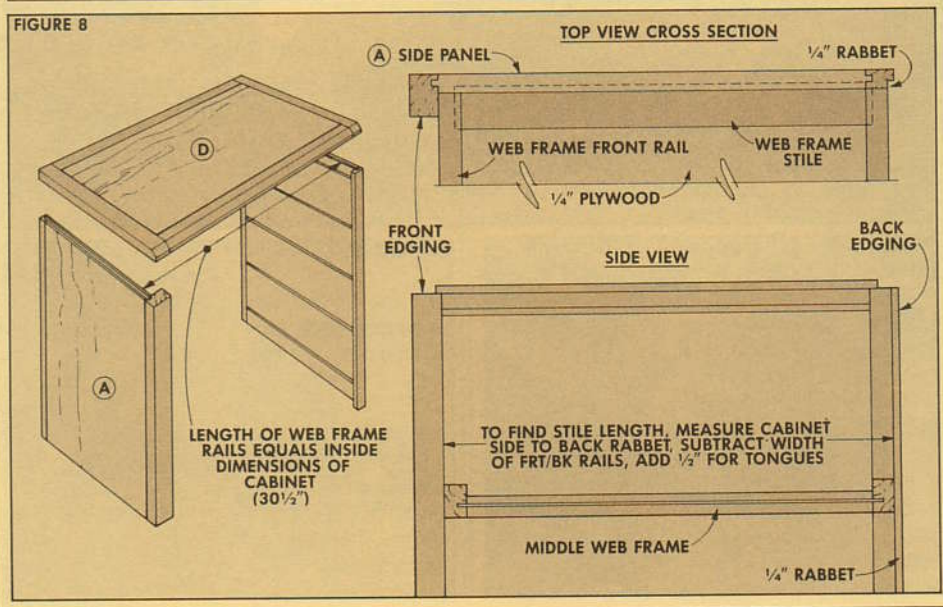


## TOP PANEL

To complete the basic cabinet, the sides are joined together with a top frame and five web frames.

**PLYWOOD PANEL.** The first step on the top frame is to cut the ¾" plywood panel (D) to size, 29¼" long by 15" wide. Then cut rabbets on both faces to form ¼"-long tongues on all four edges. Also rout a 1/16"-wide, ⅛"-deep shoulder on the outside face of the plywood, see Detail in Fig. 7.

**FRAME.** After the panel is cut, the four frame members can be cut to size. Cut the front/back rails (E) to length so they're equal to the shoulder-to-shoulder length of the panel, see Fig. 6.

The width of these rails should be 1⅝". However, this width may have to be adjusted because you want to be sure that when these rails are attached to the panel, the total width of this top assembly is equal to the width of the cabinet sides.

As for the stiles (F) for the top frame, they're cut 1⅝" wide and as long as the cabinet sides are wide (17¾").

**GROOVES.** Next, grooves are cut in the frame members to match the tongues on the plywood panel. On the front/back rails (E), rout a ¼" groove on the edge of both pieces so the face of the rails is slightly above (1/32") the surface of the panel, see details in Fig. 7.

On the stiles (F), the groove has to be stopped ½" from both ends of the stile to prevent it from showing, see Fig. 6. I routed this stopped groove on the router table, making a plunge cut to start the groove and lifting the stile off the bit to end the cut.

Then I routed an identical ¼" stopped groove on the bottom edge of the stiles, see Cross Section in Fig. 7. This groove is for attaching the top frame to the cabinet sides, see Fig. 8.

**BEVEL EDGE.** After the grooves are cut, glue all four frame members to the top panel. Then rip a ⅝" wide, 45° bevel on the front edge of the top frame, see Fig. 7.

## WEB FRAMES

To complete the cabinet, five web frames are built to connect the cabinet sides. In order to determine the size of these frames, dry-clamp the completed top frame to the cabinet sides.

**THE RAILS.** Now, measure the distance between the cabinet sides (this should be 30½") to find the length of the front/back rails (G, H, and I), see Fig. 8. The width of these rails varies with each frame: the rails (G) on the top frame are 13/16" wide (see Fig. 9), the rails (H) on the middle three frames are 1⅜" wide (see Fig. 10), and the rails (I) on the bottom frame are 2¾" wide (see Fig. 11).

**THE STILES.** To find the length for the stiles (J), you have to do a little math:

Measure the distance between the front edging piece (B) and the rabbet on the back edging piece (this should be 16⅜"), then subtract the thickness of the front/back rails (13/16" + 13/16" = 1⅝"), and add ½" for the two ¼"-long stub tenons that will be cut on the ends of the stiles, see Fig. 8. This should produce a final length of 15¼" for the stiles (J). The width of all the stiles (J) is 1⅝".

**GROOVES FOR PANEL.** After the rails and stiles are cut to size, a groove is cut on the inside edge of each piece for the plywood panel. The groove in all the stiles (J) is centered on the edge of each piece and wide enough to match the thickness of the plywood panels.

**TOP WEB FRAME.** The groove in the front/back rails (G) of the top frame is also centered on the thickness of the rail — the same as the stiles.

However, the procedure for cutting the grooves on the other frames varies because of the width of the rails.

**MIDDLE WEB FRAMES.** The front/back rails (H) on the three middle web frames are 1⅜" wide, see Fig. 10. This extra width means the groove can't be centered. Instead, it's positioned the same distance from the bottom edge as the groove on the stiles, see detail in Fig. 10.

To cut these grooves, set the fence on the saw using the groove in the stile as a guide. Make the first pass, and then adjust the fence to widen the groove to match the thickness of the plywood panel, and make a second pass to finish the groove.

**BOTTOM WEB FRAME.** On the bottom web frame, the extra-wide rails (I) also serve as a kickboard for the cabinet. The groove in these rails is a little bit tricky to cut.

To locate the position of the groove, I used a rail from one of the middle frames as a guide, see Fig. 12. Line up the top edges of both pieces, and mark the location of the groove on the bottom rail (I). Then cut the groove using the mark as a guide.

**STUB TENONS.** After all the grooves are cut, stub tenons are cut on the ends of the stiles (J) to fit the grooves in the rails. This is simply a matter of cutting two rabbets on the ends of the stiles to produce the stub tenon, see details in Figs. 9, 10, and 11.

**TONGUE ON STILES.** Next, cut a rabbet on the outside edge of all the stiles (J) to produce a tongue that fits the grooves in the sides of the cabinet.

**NOTCH.** Finally, cut a ¼" x 1⅝" notch on the front rail of the three middle frames and the bottom frame, see Fig. 13. This notch is used to attach the drawer guides.

**ASSEMBLY.** When all the work is complete on the frame members, dry-clamp them together and measure the inside opening to determine the size of the plywood panel (K). Finally, glue and clamp the web frames together with the plywood panels in place.

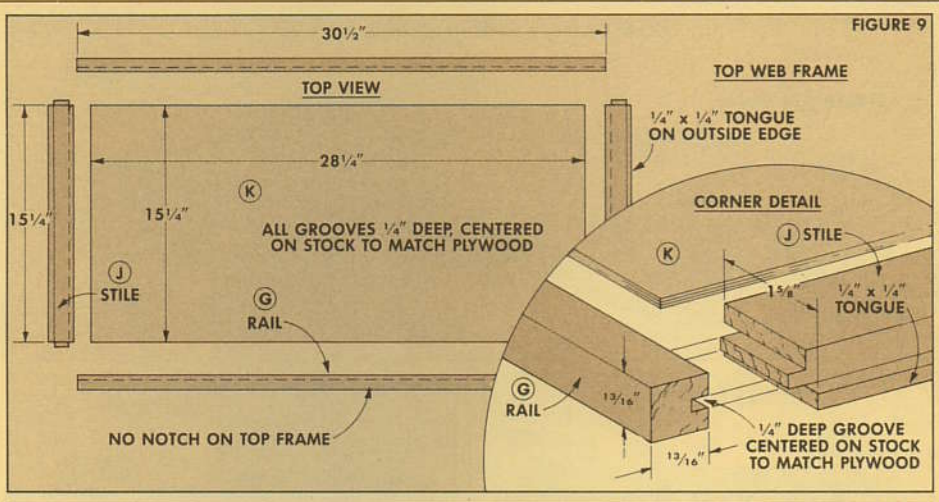

FIGURE 9

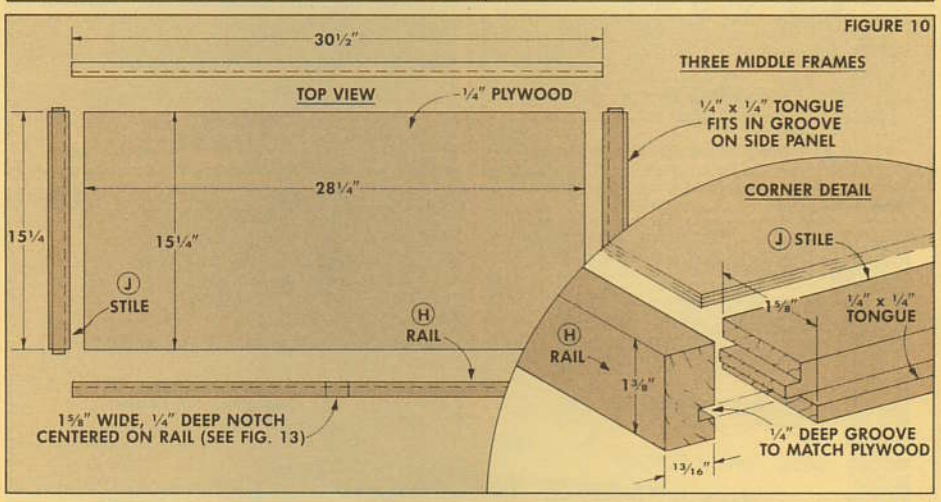

FIGURE 10

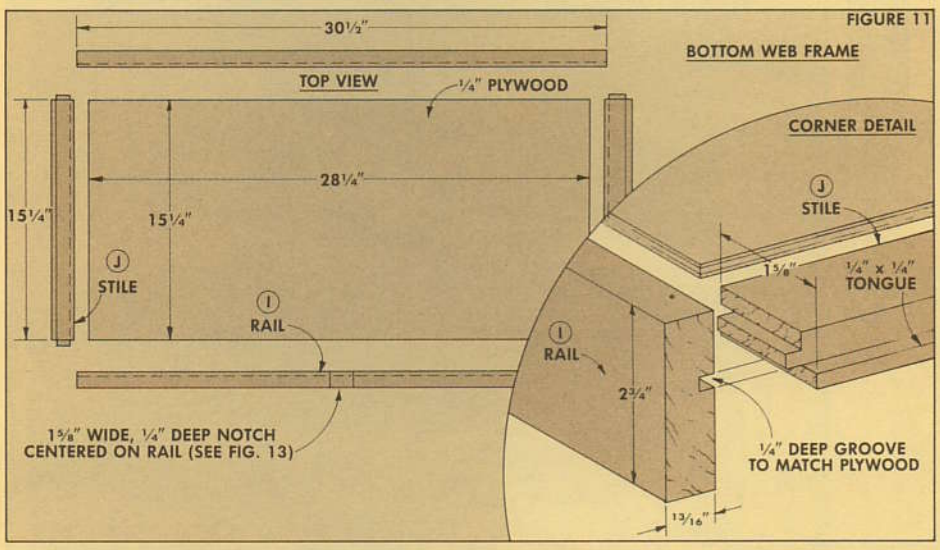

FIGURE 11

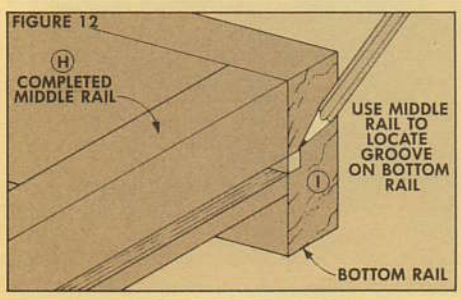

FIGURE 12

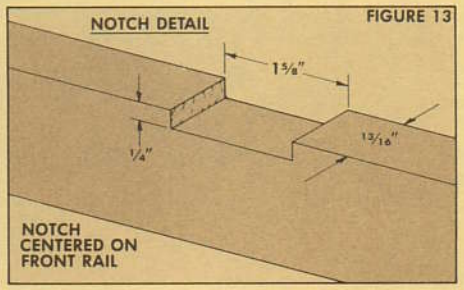

FIGURE 13

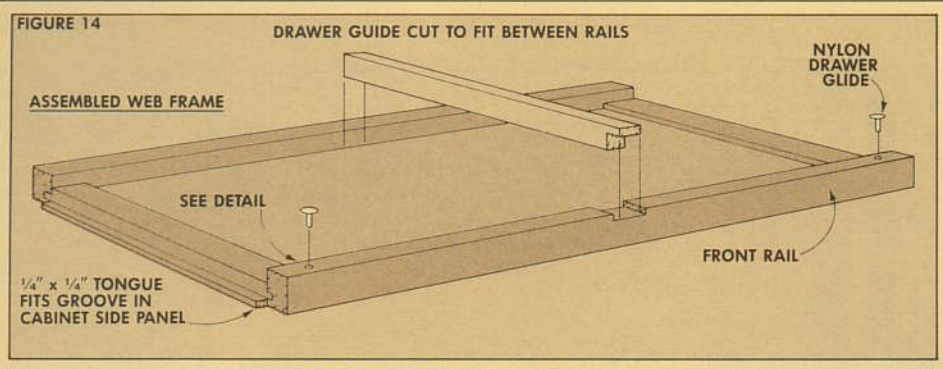


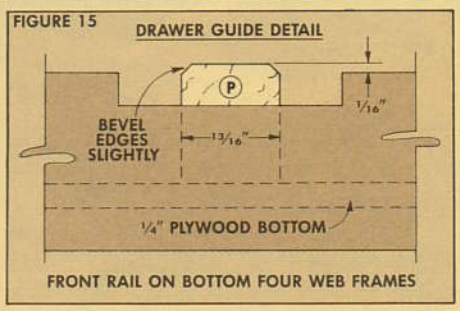


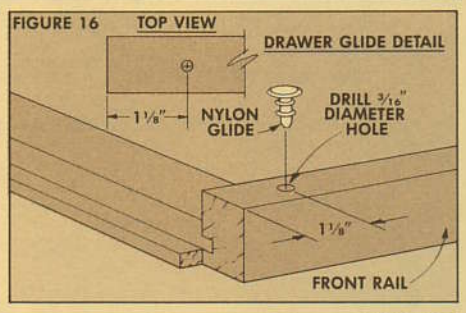


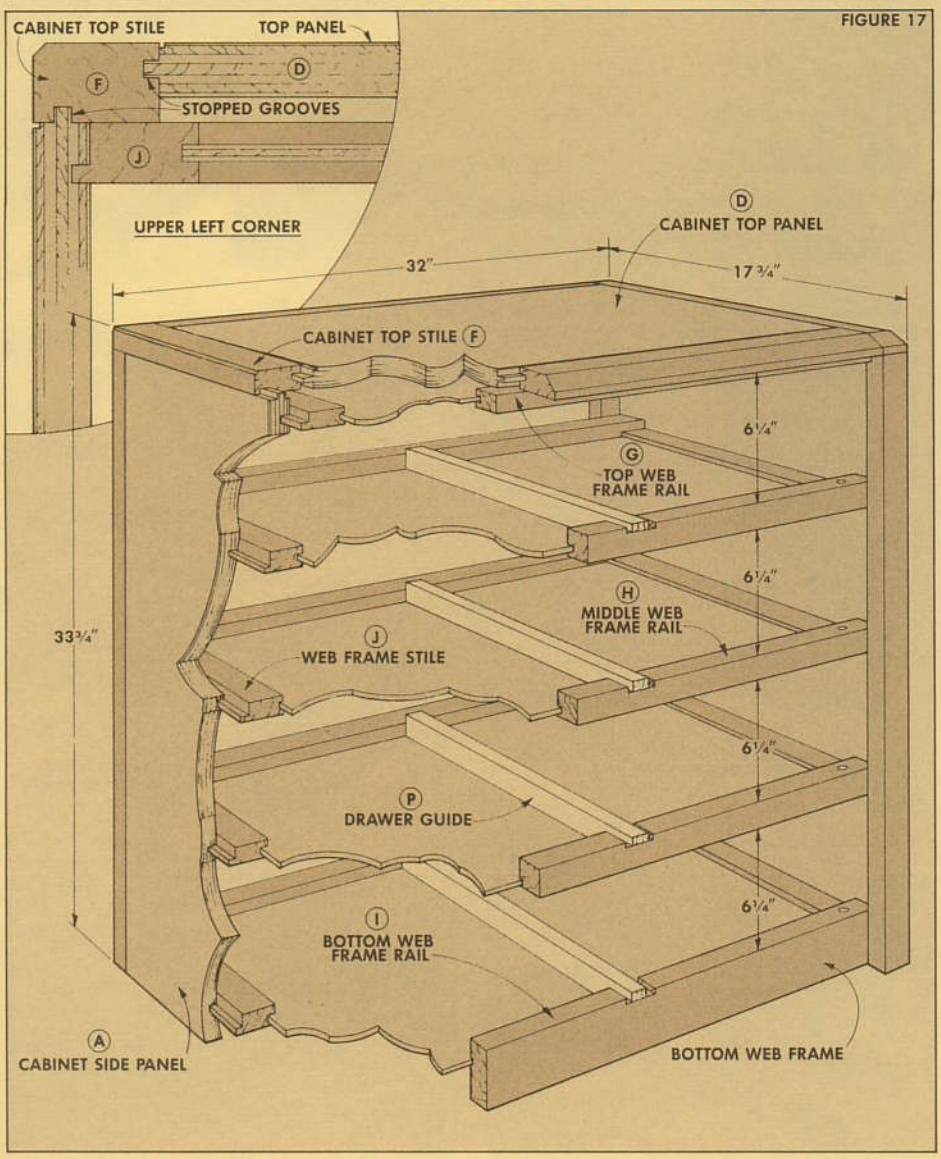


## THE DRAWER GUIDE SYSTEM

When the web frames are complete, the next step is to attach the drawer guides (P), see Fig. 14. Cut the four drawer guides wide enough so the top edge of the guide is 1/16" above the front rails, see Fig. 15. Then trim them to length so they butt against the back rail, and extend to the front edge of the front rail, see Fig. 14.

Next, cut a rabbet on the front end of the guides so it overlaps the notch in the front rail, see Fig. 14. Also, chamfer the top edges of the guides slightly to reduce binding. Then glue the guides to the plywood panel of the web frame so they're centered on the length of the rails.

**DRAWER GLIDES.** The last step before the cabinet is glued together is to drill 3/16" holes for the nylon drawer glides on the lower four web frames. These holes are 1 1/8" from each end of the front rail, see Fig. 16.

**ASSEMBLY.** At this point, I glued the cabinet sides together with all five web frames in place, keeping the frames tight against the front moldings on the cabinet sides. Then I glued the top panel in place.

## THE DRAWERS

At last, we arrive at the whole point of building this chest: the drawers. The drawers are designed with a concealed cove on the drawer front, see Fig. 19. Although this makes the drawer fronts interesting from a design and construction standpoint, it also makes the drawers slightly more complicated to build.

We decided to put all of the details on the construction of these drawers in a separate article on page 13. But basically the drawers are constructed as follows.

**SIDES AND BACK.** The first step is to cut the 1/2"-thick drawer sides (N) and back (M) to width so they're 1/8" narrower than the height of the opening between the web frames.

**DRAWER FRONTS.** The drawer fronts (L) are cut 3/4" wider than the height of the drawer opening to allow for the overlap on the web frames, and for the 1/2" cove on the bottom edge, see Fig. 19.

**JOINERY.** To join these drawers, I wanted to use half-blind dovetails. When making several drawers like this, it's easier and certainly faster to use a router and dovetail fixture to cut these joints.

This decision is one of the major reasons why the cabinet has to be designed around the drawers. There are only certain drawer sizes that have the proper spacing for routed dovetails, and so the cabinet had to be designed with this in mind. (This is discussed in more detail on page 13.)

**CUT THE JOINTS.** Normally, joining the sides of a drawer using a router fixture is relatively easy. But when the drawer front extends both above and below the drawer

sides, it requires some special techniques.

Luckily, the overlap of the drawer fronts can be produced by simply cutting the drawer front wider than normal and using a small shim in the dovetail fixture. For more information on this technique, see page 13.

COVE. Once the corner joinery is complete, a ½" cove is cut on the bottom inside edge of the drawer front to provide a finger pull for opening the drawers, see Fig. 19. Then a ⅜" chamfer is cut on the top edge to provide enough room for easy access to the finger pull on the next higher drawer. Finally, rout an ⅛" chamfer on the bottom edge and both ends of the drawer front.

DRAWER BOTTOM. Next, a groove is cut along the bottom edge of each piece for the drawer bottom (O). Position this groove ½" from the bottom of the drawer sides, see Fig. 19.

ASSEMBLY. After these grooves are cut, dry-assemble the drawer and take measurements for the ¼" plywood bottom. Cut the bottom to size and then glue the drawer together with the bottom in place.

DRAWER GUIDES. To complete the drawer guide system, cut the drawer runners (Q) to size, see Fig. 20. Then rout a groove down the center of the runner so it's just slightly wider than the width of the drawer guide, and glue the runner to the drawer bottom so it's centered on the width of the drawer, see Fig. 20.

## FINISHING TOUCHES

One of the last steps on the cabinet is to soften the edges by routing an ⅛" chamfer on all of the exposed edges, except the back edge of the cabinet sides.

I finished the chest with three coats of Deft interior wood finish, sanding between each coat with 400 grit Wet-or-Dry sandpaper.

FIGURE 18

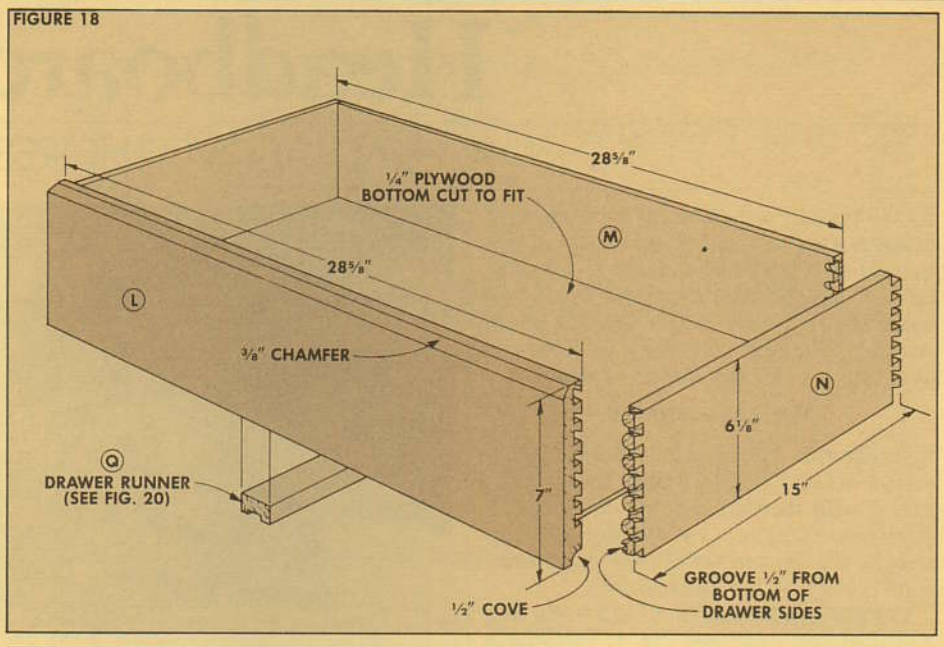


FIGURE 19

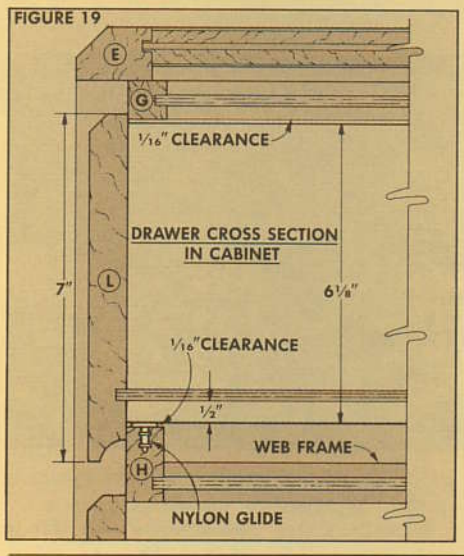


FIGURE 20

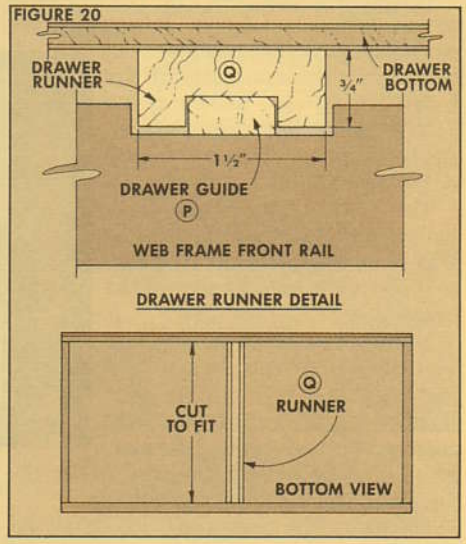


## MATERIALS LIST

**Overall Dimensions: 33¾"H x 32"W - 17¾"D**

| | | |
|---|---|---|
| A | Side Panels (2) | ¾ ply 16⅛ x 32 15/16 |
| B | Side Frt. Edgings (2) | 1 1/16 x 1⅝ - 32 11/16 |
| C | Side Bk. Edgings (2) | 1 1/16 x ¾ - 32 11/16 |
| D | Top Panel (1) | ¾ ply 15 x 29¼ |
| E | Top Rails (Frt/Bk) (2) | 1 1/16 x 1⅝ - 28¾ |
| F | Top Stiles (Sides) (2) | 1 1/16 x 1⅝ - 17¾ |
| G | Top Web Fr Rails (2) | 13/16 x 13/16 - 30½ |
| H | Mid Web Fr Rails (6) | 13/16 x 1⅜ - 30½ |
| I | Btm Web Fr Rails (2) | 13/16 x 2¾ - 30½ |
| J | Web Fr Stiles (10) | 13/16 x 1⅝ - 15¼ |
| K | Web Fr Panels (5) | ¼ ply - cut to fit |
| L | Drawer Fronts (4) | 13/16 x 7 - 28⅝ |
| M | Drawer Backs (4) | ½ x 6⅛ - 28⅝ |
| N | Drawer Sides (8) | ½ x 6⅛ - 15 |
| O | Drawer Bottoms (4) | ¼ ply - cut to fit |
| P | Drawer Guides (4) | 13/16 thick - cut to fit |
| Q | Drawer Runners (4) | ¾ x 1½ - cut to fit |
| R | Cabinet Back (1) | ¼ ply - cut to fit |

## CUTTING DIAGRAM

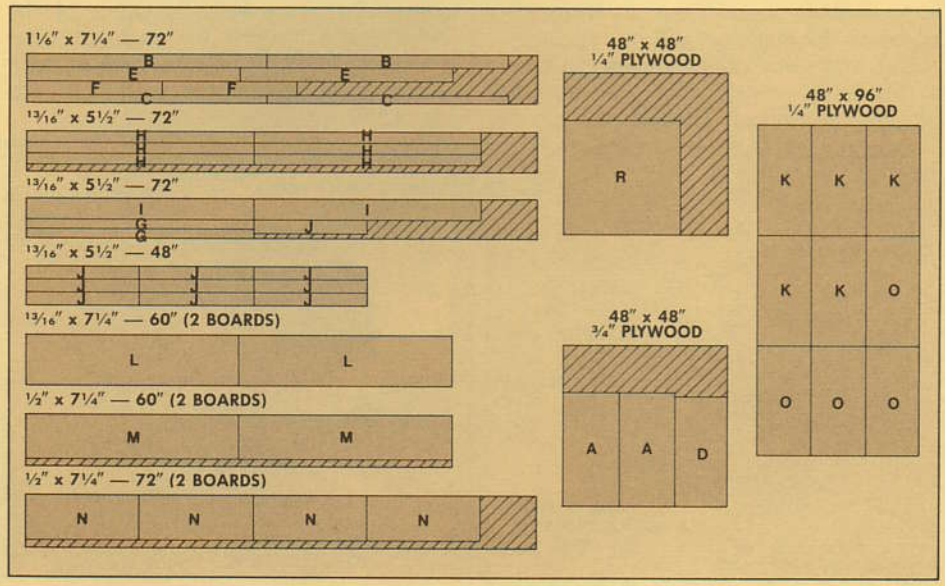

# Headboard

## A HEAD ABOVE THE REST

By the time I finished building the chest of drawers and the night stand shown in this issue, I no longer had a choice — I had to build a headboard to match. The headboard shown here is designed to fit a queen size bed. But it's very easy to alter the dimensions to fit any mattress size.

### THE BASIC FRAME

Building this headboard is really just a matter of building a very large frame that's joined with mortise and tenon joints. To start construction, I cut the uprights (A) and the top (B) and middle (C) rails to size from 8/4 stock (1¾"-thick stock).

**UPRIGHTS.** The uprights (A) are cut 3¼" wide and 41⅛" long, see Fig. 1. The length of the uprights actually determines the overall height of the headboard in relation to the mattress. If the headboard is built with 41⅛"-long uprights (as shown), the bottom edge of the middle rail (C) will be 23" off the floor.

This is the right height for a mattress that's 24" off the floor — that is, so the top of the mattress is 1" above the bottom edge of the headboard.

Note: This 24" measurement was taken to the top of a standard mattress and box spring combination on a metal frame with casters.) If the height of the mattress is more or less than 24", alter the length of the uprights accordingly.

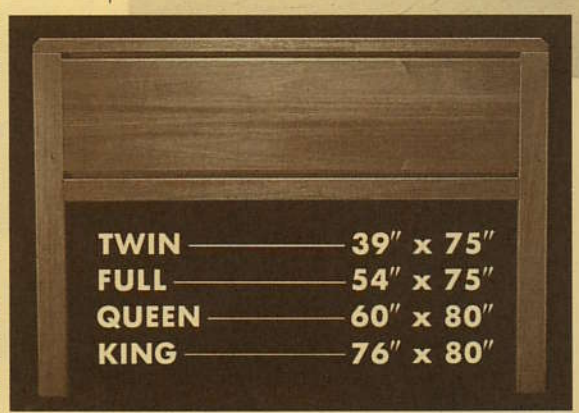


**TOP RAIL.** The next step is to cut the top rail (B) to size. First, rip the rail 1⅝" wide from 8/4 stock. As for the length of the rail, it depends on the width of the frame that supports the mattress and box springs.

Check the mounting holes in the frame to determine exactly where you want the uprights positioned. Then cut the top rail to the length necessary to put the uprights in the right position on the bed frame.

**MIDDLE RAIL.** The middle rail (C) is ripped to a width of 2⅝". Then to determine the length of this rail, take the final length of the top rail (B), subtract the width of both uprights (3¼" each, or a total of 6½") and add 1½" for the two ¾"-long tenons on the ends of the middle rail, see Fig. 1.

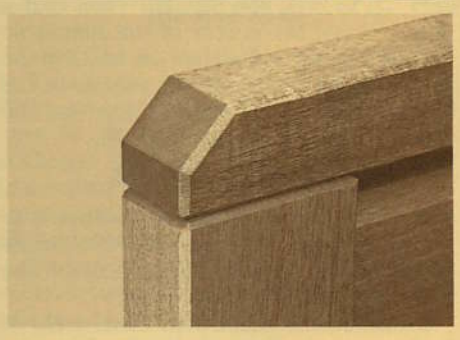

**JOINERY.** After the uprights and rails are cut to size, they're joined together with mortise and tenon joints. (A complete, step-by-step explanation of how to cut a mortise and tenon joint is given in *Woodsmith* No. 26.)

Basically, all this involves is boring a series of ⅜" holes centered on the width of the stock and ¾" deep, see Fig. A. Then clean up the cheeks of the mortise with a

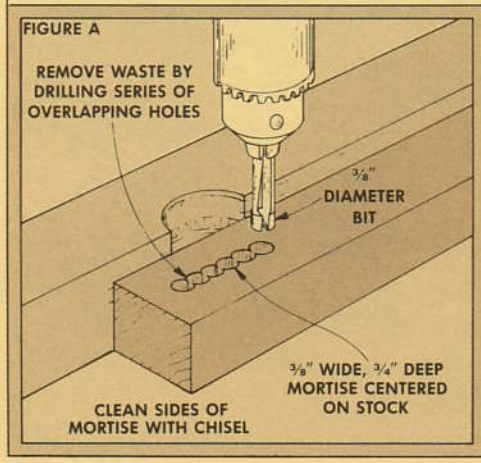


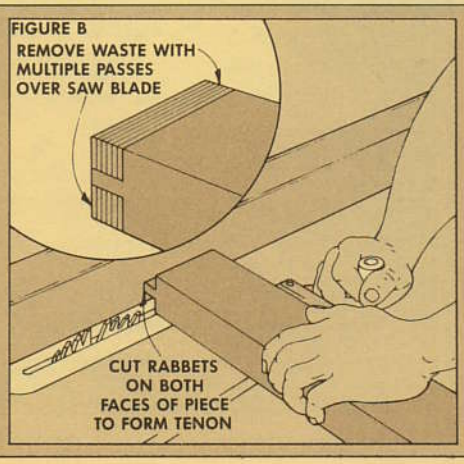


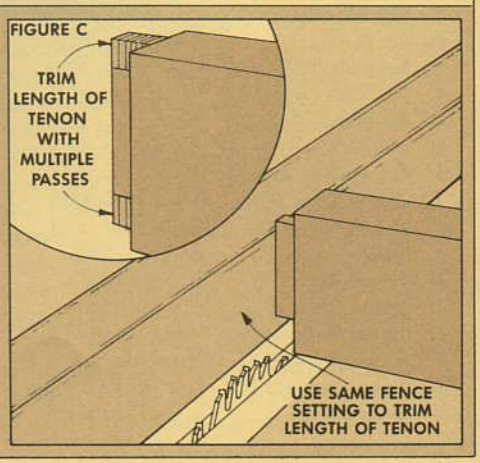

chisel, leaving the ends in the half-round shape, see Figs. 2 and 3.

**TENONS.** After the mortises are cut, ¾"-long tenons are cut on the uprights and the middle rail. To cut the tenons, set the fence of the table saw ¾" from the outside of the blade, see Fig. B.

Then use a piece of scrap to set the height of the blade. Make passes over both faces of the workpiece, and gradually raise the blade until the thickness of the tenon fits snugly in the mortise.

Follow the same procedure to cut the shoulders of the tenon (see Fig. C) so it fits the length of the mortise. Then use a file to round over the corners to fit the rounded ends of the mortises.

### SUPPORT RAILS

Next, grooves are routed on the inside edge of the top and middle rails. These grooves are for the panel support rails (D), see Fig. 4.

The groove on the top rail must be stopped 3" from both ends so it doesn't show on the edges of the headboard. I cut this stopped groove on the router table.

Set the fence ¼" from the inside edge of a ¼" straight bit. Then mark the start and stop points on the edge of the rail. Now, plunge the rail on the bit to start the cut, and lift it off the bit to stop it.

The groove on the middle rail is cut with the same set-up on the router table, but this time, the groove doesn't have to be stopped, see Fig. 4.

**SUPPORT RAILS.** After the grooves are cut, the support rails (D) are cut 2¼" wide and to rough length. (They're trimmed to final length later.)

**CUT TONGUES.** Then a tongue is cut on one edge of the support rails. To make the tongues, cut rabbets on both faces of the rails, leaving a tongue that fits snugly in the groove.

### CHAMFER THE EDGES

To complete the top rail (B), cut a 45° miter on both ends, see Fig. 4. Then before as-

### MATERIALS LIST

Overall Dimensions: 1¾"H x 42"W - 60"L

| | | |
|---|---|---|
| A | Uprights (2) | 1¾ x 3¼ - 41⅛ |
| B | Top Rail (1) | 1¾ x 1⅝ - 60 |
| C | Middle Rail (1) | 1¾ x 2⅝ - 55 |
| D | Support Rails (2) | 13/16 x 2¼ - 53½ |
| E | Trim Cap (2) | 13/16 x ⅜ - 53½ |
| F | Plywood Panel (1) | ¾ x 13 - 53½ |

### CUTTING DIAGRAM

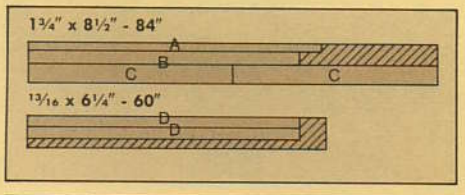


FIGURE 1

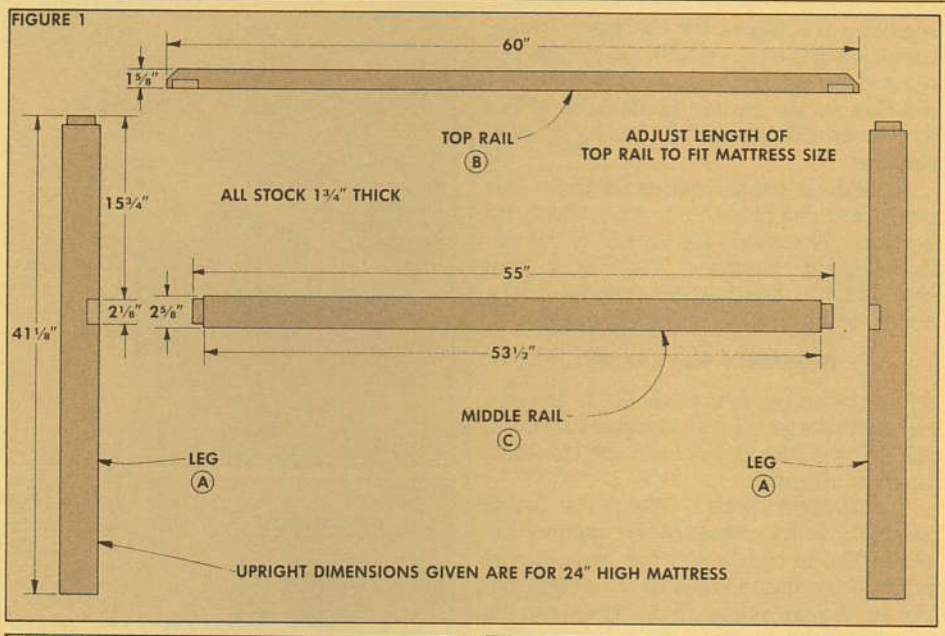


FIGURE 2

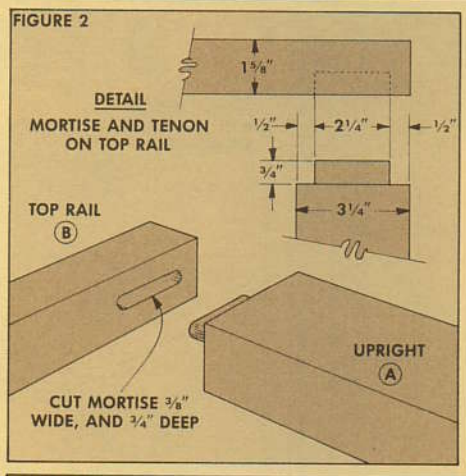


FIGURE 3

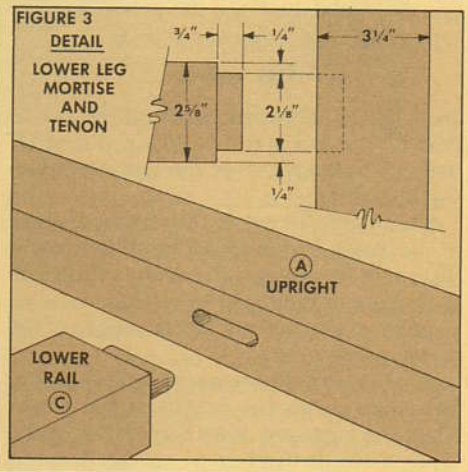


FIGURE 4

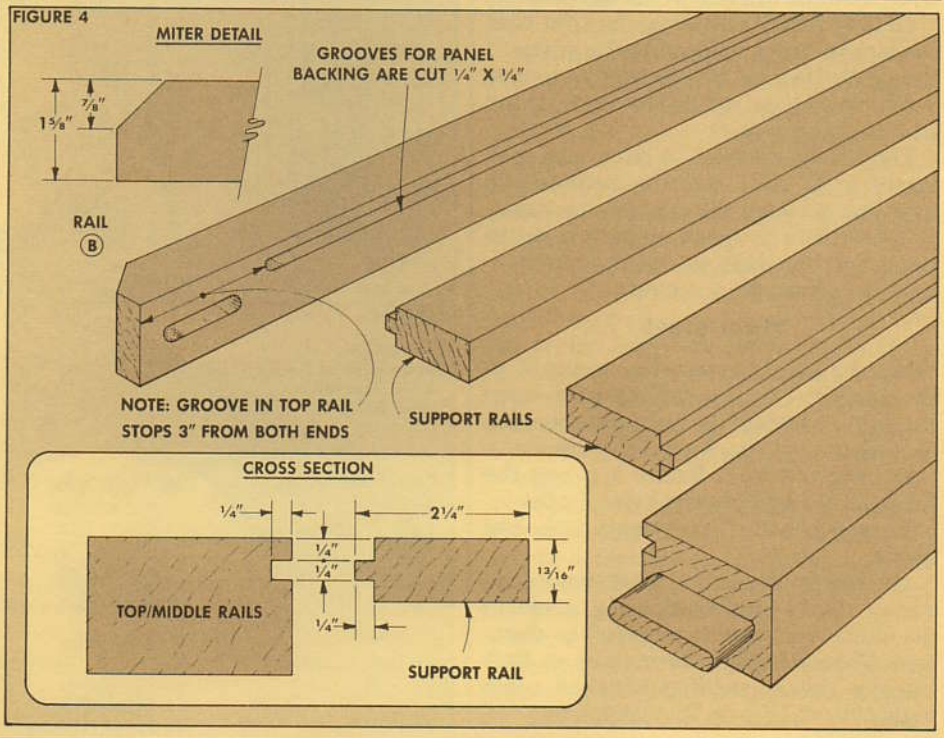

sembling the pieces for the basic frame, the edges of the top rail (B), the middle rail (C) and the uprights (A) are chamfered. I did this on the router table, setting the height of a 45° chamfer bit to cut a ⅛"-wide chamfer.

All of the edges and corners of these four pieces are chamfered . . . with three exceptions. The inside top corner of the uprights is not chamfered, see Fig. 6. And both the top and bottom corners of the middle rail are not chamfered, see Fig. 5.

### ASSEMBLE THE FRAME

After the edges are chamfered, the uprights can be glued and clamped to the top rail and the middle rails to form the basic headboard frame.

**CUT SUPPORT RAILS.** When the frame assembly is dry, measure the opening between the uprights and cut the support rails (D) to final length to fit snugly between the uprights. Then they can be glued and clamped into the grooves in the top and middle rails, see Fig. 7.

### THE PANEL

Now the ¾" plywood panel can be cut to size. This panel is ripped to a width of 13" and cut to length so it fits tight between the uprights.

**TRIM CAPS.** To cover the exposed edges of the panel, I added solid-wood trim caps. To mount these caps, first rout rabbets on both faces of the panel to produce ⅛" x ⅛" tongues on the top and bottom edges of the panel, see Fig. 8.

Rip the trim caps to a width of ⅜", and to length to match the length of the panel. Then cut a groove down the center of the trim cap to fit the tongue on the panel.

**CHAMFER TRIM CAP.** Now the trim caps can be glued and clamped to the edges of the panel. Then use the chamfer bit to rout a 45° chamfer on the inside edges of the trim caps, see Fig. 9.

This chamfer should be positioned so it leaves a 1/32"-wide shoulder next to the joint line between the cap and the panel. (It's best here to sneak up on this cut to make sure you don't cut too deep and expose the plywood's inner core.)

### FINAL STEPS

When the panel is complete, mount it to the support rails by drilling pilot holes through the back of the rails, and screwing it in place with No. 8 x 1¼" Fh screws.

**MOUNTING HOLES.** Before applying the finish, locate and predrill holes for the ¼" bolts used to mount the uprights to the bed frame.

**FINISHING.** Finally, I finish-sanded all surfaces of the headboard, being careful to not round over the crisp edges of the chamfers. Then I applied three coats of Deft interior finish, sanding between coats with 320-grit Wet-or-Dry sandpaper.

FIGURE 5

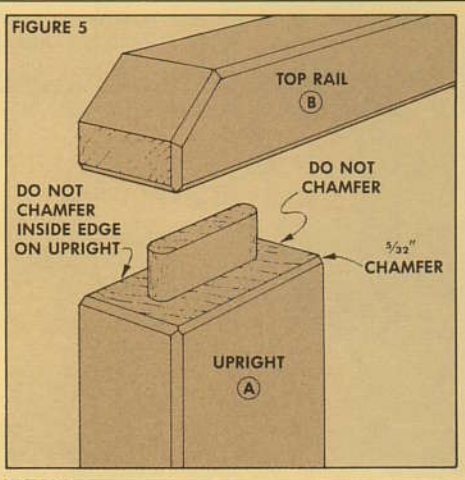


FIGURE 6

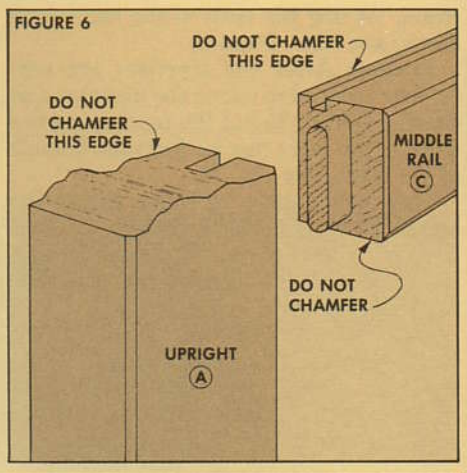


FIGURE 7

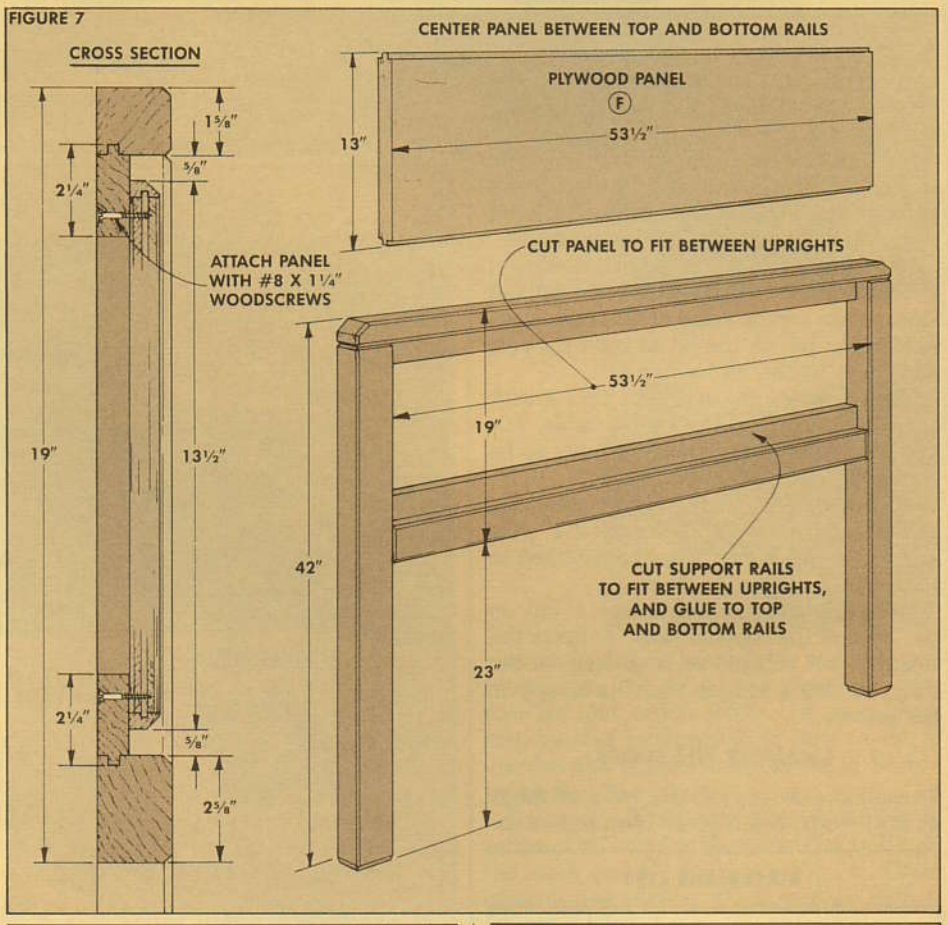


FIGURE 8

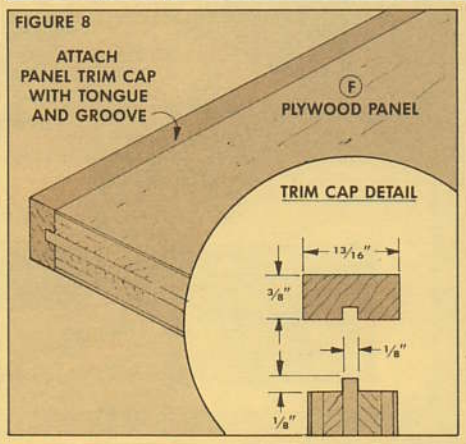


FIGURE 9

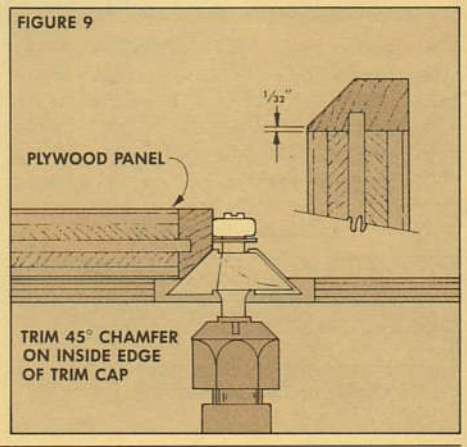

# Building Drawers

## THE DETAILS FOR DRAWER CONSTRUCTION

The drawers used on the chest and the night stand shown in this issue are a little out of the ordinary. We wanted to keep the design clean and simple . . . yet we also wanted to build drawers that were interesting from a woodworking standpoint.

To make them interesting, we decided to have absolutely clean drawer fronts — not even any drawer pulls. Instead, the lower edge of the drawer front has a concealed cove which is used to open the drawer.

This feature had to be taken into consideration for the design of the cabinet as well as the drawer. The drawer front has to extend down far enough to allow room for the cove, see Fig. 1. At the same time, the cabinet has to be designed so there's enough clearance to allow you to get your fingers into the coved lip.

As this design took shape, what we were really doing was designing the chest around the drawers. Or more precisely, designing the openings in the chest for specific drawers.

After all the design considerations were worked out, there was still the practical matter of building the drawers. This involved two basic decisions: 1) the construction (joinery) that would be used for the drawers, and 2) the method used to mount them in the cabinet (the guide system).

### DRAWER CONSTRUCTION

As far as the construction of these drawers is concerned, I built them using 4/4 mahogany for the drawer fronts and ½" sycamore for the sides and backs.

Using two different woods like this is a common practice. The drawer front is made with the same wood used for the rest of the cabinet (mahogany in this case of the projects in this issue). Then the sides and back are made of inexpensive stock. (We usually use ½" sycamore or poplar for the sides and back because these woods are downright cheap around here, and they're also easy to work with.)

**HEIGHT OF OPENING.** To build the drawers for the chest, I started with the sides and back. The first step here is to rip ½" stock to width so it fits the height of the opening in the cabinet. That sounds simple enough, but the most important thing about building drawers is the planning that precedes this measurement.

The height of the opening should actually be determined when the cabinet is in the design and planning stage.

The chest of drawers is designed with openings that are 6¼" high, which accounts for drawer sides that are 6⅛" high and ⅛" for clearance. These are not arbitrary dimensions.

FIGURE 1

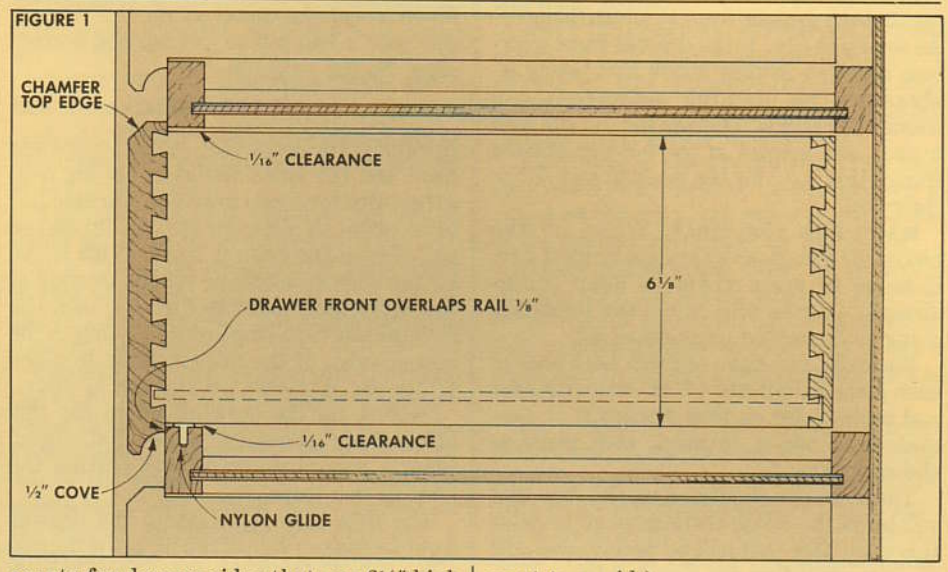


**DOVETAIL SPACING.** The 6⅛" height for the drawer sides produces proper spacing for the dovetail joint when it's cut with a router and dovetail jig. This "proper spacing" means that the dovetails are evenly spaced on the drawer side with a half pin on the top edge and a half pin on the bottom edge, as shown in Fig. 1.

Shop Note: The smallest width for a drawer side when the dovetail jig is used is 1¾". From here the width of the sides can increase in increments of ⅞", and still have proper spacing for the routed dovetails. One of these increments is 6⅛". Another is 4⅞" — the dimension used for the drawer in the night stand.

**CLEARANCE.** Also included in the height of the drawer opening is a clearance of ⅛". This allows 1/16" for clearance between the top edge of the drawer and the web frame above it, plus 1/16" for the head of the nylon glide that the bottom edge of the drawer side rides on, see Fig. 1.

These two allowances demonstrate the importance of planning ahead — you have to know how the drawer is going to be built *and* how it's to be mounted. By using a nylon glide, you have to plan ahead for the 1/16" space that it requires. So, we're dealing with rather small tolerances for the cabinet openings.

If there's much more than 1/16" clearance above the drawer, it will tend to drop down too much when it's opened. (You know the feeling when you open a drawer and the front drops — there's that sudden fear and quick move to catch it. That's what you want to avoid.)

**CUT SIDE TO WIDTH.** Hopefully the cabinet has been built as planned — with openings 6¼" high. If it is, rip the stock for the drawer sides and backs to a width of 6⅛".

If the opening is larger or smaller than planned, the drawers can still be made, but the dovetails won't have the proper spacing. And, because of the way the dovetail jig works, the dovetail on the bottom edge will be affected the most. It may be only partially cut, and thus it will look a little odd and will be a little weak, but the drawers will hold together.

**CUT SIDES TO LENGTH.** After the drawer sides are cut to width, they can be cut to length. This is basically a "cut to fit" operation. That is, the drawer sides must be cut to length so the assembled drawer fits the depth of the cabinet . . . with a little clearance between the back of the drawer and the back of the cabinet.

To do this, first measure the depth of the cabinet. Then subtract the thickness of the drawer front (13/16") and drawer back (½"), add on the length of the dovetails (they overlap on the front and back a total of ⅝"), and finally subtract the amount of clearance needed at the back (usually ½" is sufficient). Then cut the drawer sides to length.

**CUT BACK TO LENGTH.** Next, the drawer back can be cut to length. This is relatively easy to determine on the drawers in the chest and night stand because the length of the back is equal to the length of the drawer's front.

The length of the front is determined by measuring the width of the cabinet opening and subtracting an amount for clear-

ance. Some people allow as much as ⅛" on each side (or a total of ¼") for clearance. I think this is too much and makes for a sloppy drawer. I usually make the total clearance no more than ⅛" (or 1/16" on each side).

**CUT FRONT TO WIDTH.** The only thing left is to cut the drawer front to width (height). As shown in Fig. 1, the drawer front overlaps the web frames above and below it. Measure the opening between these frames and add ⅛" overlap for the top web frame, and a total of ⅝" for the bottom frame (this is ⅛" for the overlap and ½" for the cove).

**MARK FOR ASSEMBLY.** When all the pieces for the drawers are cut to final size, it helps to mark them to keep things straight — especially when the joints are going to be routed on dovetail jig.

Basically, you have to mark both ends of each piece to indicate which drawer it's for and which joint on that drawer it is. One system to use is to mark each piece as shown in Fig. 2.

These marks should be on the face that will be on the inside of the drawer, because this is the face that will be visible when the piece is placed on the dovetail jig.

### JOIN SIDES AND BACK

When all the pieces are cut to size and marked, the next step is to join these pieces to form the drawers. Start by routing the dovetails to join the back with the two sides. (This is the easiest joint to cut.)

As mentioned above, I planned to use a router and a dovetail jig to cut these joints. (A complete explanation of how to set it up and use a dovetail jig is covered in a detailed article in *Woodsmith* No. 22.)

Basically, to set up the cut for the back and side, mount the drawer back on top of the jig and the drawer side on the front on the jig, see Fig. 5. Then rout the dovetails in the normal way.

When the routing is complete on the drawers for the chest, there should be seven dovetails centered on the drawer side with a half-pin on the top and bottom edge. So far, so good.

### JOINT FOR FRONT

Normally, the joint that joins the drawer front and the sides would be no big deal either. But for these drawers, the side has to be offset to allow for the 3/16" lip on the top edge of the drawer front. (This is 1/16" for the clearance and ⅛" for the overlap of the web frame, refer to Fig. 1.) Also, the dovetails have to stop before getting to the bottom edge of the drawer front to allow ⅝" for the ⅛" clearance and the ½" cove.

Setting up the dovetail jig to cut this offset joint presents some challenges. What I wound up doing was cutting the joint in two steps.

The first step is to clamp the drawer front on the top side of the jig in the normal manner (with the inside face up and the top edge of the drawer against the pin). However, to create the 3/16" lip on the top edge of the drawer front, the drawer side is jogged over with a 3/16" shim, see Fig. 6.

Now the dovetails can be routed . . . until you get to the last pin. Stop before "rounding the corner" to complete the last pin. What you want to do here is complete the last dovetail without making another socket in the drawer front. This will leave room for the cove on the bottom edge of the drawer front.

The only problem is that the last dovetail has to be completed. To do this, replace the drawer front with a piece of scrap wood, and continue routing, see Fig. 7. (The scrap wood will help to prevent chip-out on the drawer side as the last dovetail is routed.)

**ROUT COVE.** When these joints are complete, the ½" cove can be routed on the bottom edge of the drawer fronts. I did this on a router table.

Then I chamfered the top edge at 45°. This allows a little extra space to get your fingers into the cove to open the drawer.

Before assembling the drawer, I also rounded over the top edges of the drawer sides with a ⅛" round-over bit. This is not a necessary step, but it softens the edges of the sides, and it just looks nicer when you open the drawer.

### MOUNTING THE BOTTOM

The last step in making the drawer is to cut the grooves to mount the drawer bottom. Again, this requires planning ahead. The grooves should be positioned so 1) they don't create a gap that's visible on the outside of the drawer, and 2) so the drawer bottom is high enough to leave room for the runner that's part of the guide system.

For these drawers, I positioned the groove so it's ½" from the bottom edge of the drawer side, see Fig. 4. This, unfortunately, creates a small gap on the back joint, see Fig. 4.

This was bound to happen on these drawers because of the offset pattern of the dovetail joints. It can be prevented by cutting a stopped groove on the drawer back, but I decided I could live with a small gap on the back joint.

FIGURE 2

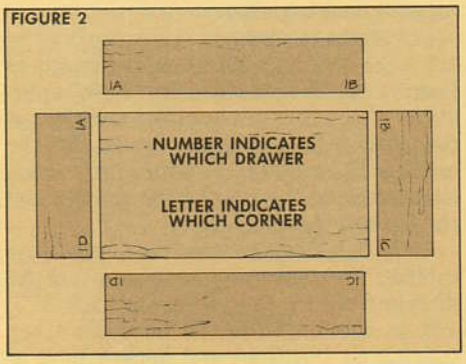


FIGURE 3

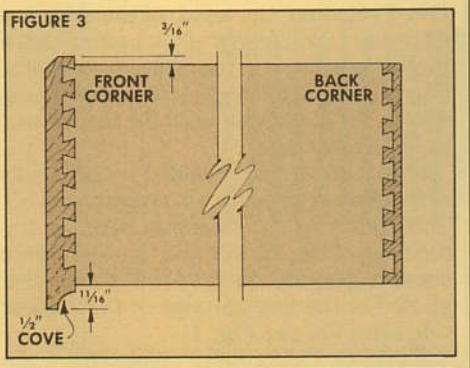


FIGURE 4

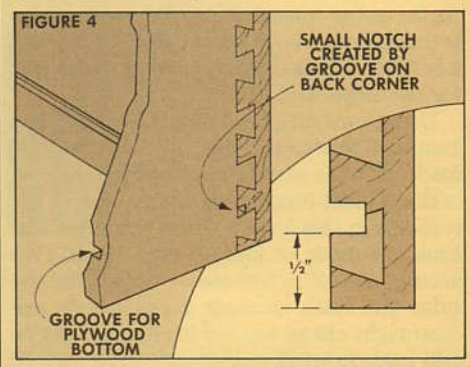


FIGURE 5

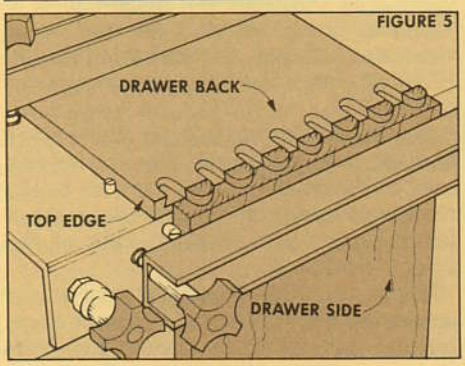


FIGURE 6

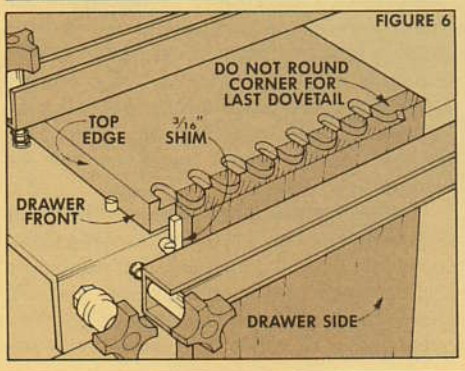


FIGURE 7

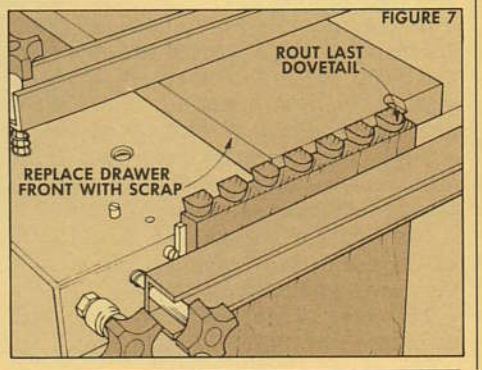

**DRAWER BOTTOM.** As for the drawer bottoms, I made them out of ¼" hardwood plywood. The only problem here is that hardwood plywood is almost never a full ¼" thick, it's almost always a little on the shy side. This means the groove for the drawer bottom has to be custom cut.

**CUT GROOVE.** I cut the groove on a table saw, sneaking up on the width of the cut, until it matched the actual thickness of the plywood.

This usually takes two passes with a ⅛"-thick saw blade. (I use a Freud LM72M carbide-tipped rip blade to cut these grooves. This blade has teeth that are ground with a flat top which produces a flat-bottomed groove.)

**CUT DRAWER BOTTOM.** After the grooves are cut, the drawer bottom itself can be cut to size. To get the final dimensions of the bottom, dry-clamp the drawer together and measure the inside width and depth. Then add the depth of the grooves to both dimensions.

I usually cut the drawer bottom so it has a good tight fit in the grooves. This way the bottom will help square up the drawer as the pieces are clamped together.

## GUIDE SYSTEM

When the drawers are complete, the last step is to mount them in the cabinet. Of course you want to mount them so they operate smoothly as they're opened and closed. This means having a guide system. And once again, it means planning ahead.

The chest of drawers is designed to have web frames with extra-high front rails between the drawers. These frames not only hold the cabinet together, they also provide an anchoring point for the drawer guide system.

**GUIDE SYSTEM.** The system we chose for the chest and the night stand consists of a guide bar that's mounted to the web frame. Then riding on top of this guide is a runner that's attached to the bottom of the drawer.

**MOUNT THE GUIDE BAR.** Since both of these pieces are subject to a good deal of friction and wear, I made them out of maple. Maple is very hard, resists wear, and with time will become burnished to a very smooth, almost slippery surface (which is ideal for drawer guides).

To make the guide bar, rip a piece of maple to width so when it's turned on edge it sticks up enough so it's exactly level with the nylon glide at the ends of the front rail, see Fig. 8. However, this is another matter of planning ahead.

**NYLON GLIDES.** Before you can really cut the guide bar to final size, the nylon glides have to be mounted on the top edge of the web frame rail.

I used nylon glides to prevent wear and tear on the front rail of the web frame. However, because of their position, the holes for these glides are very difficult to drill after the cabinet is assembled. This means the holes for the glides have to be drilled *before* the cabinet is assembled. Which again, means planning ahead.

Option: If you don't want to use nylon glides, an option is to drill ⅜" holes and use a ⅜" dowel. Just cut the dowel so it sticks up 1/16" above the rail.

**CUT GUIDE BAR.** Now back to the guide bar. To make it, rip a piece of maple to width so when it's turned on edge it sticks up enough so it's exactly level with the top of the nylon glides.

Then cut a notch on the front end of the guide bar to fit over the notch in the web frame rail. The shoulder of this notch should fit snugly against the back side of the rail, and the back end should be snug against the back rail.

**CHAMFER EDGES.** To complete the guide bar I usually chamfer the edges. If there's going to be a problem with the fit of the runner and the guide bar, it's going to be where the square edge of the guide bar meets the inside corner of the groove on the runner. To eliminate any problems in situations like this, I "knock off" the edges so nothing can hang up.

**MOUNT THE GUIDE BAR.** Now the guide bar can be mounted to the web frame. Apply glue to the bottom edge of the bar, and place it on the web frame so it's centered in the notch in the rail, see Fig. 8.

Then clamp the guide bar in place with C-clamps on the front and back. As the clamps are tightened, make sure the guide bar is exactly square with the front rail.

Although this bar can be screwed to the web frame, I think gluing and clamping is a better procedure. During the process of drilling pilot holes and driving in the screws, the bar is bound to slip out of square. So I think it's better to just apply glue and clamp it in place.

**THE RUNNER.** The other half of the guide system is the runner. In this case the runner is simply a piece of maple with a groove down the center.

The runner should be about ½" wider than the guide bar to allow a ¼" on each side of the groove. (Once again, this width was planned for when the notch was cut in the front runner.)

When the groove is cut in the runner, the width of the groove should allow for a smooth fit over the guide bar — just wide enough so it fits over the bar easily, but not sloppy.

The depth of the groove should be such that when the bottom of the groove is riding on the top of the guide bar, the sides of the drawer are riding on the glides.

**MOUNT THE RUNNER.** After the groove is cut, the only problem is how to mount the runner to the bottom of the drawer. To do this, cut the runner to length so it has a very tight fit between the front and back of the drawer.

Then push it in place on the drawer bottom and mount the drawer in the cabinet. To position the runner, push the drawer all the way into the cabinet until the drawer front is in full contact with the rails. (This will ensure the drawer is not cocked out of position.) Also, adjust the drawer front from side to side until the clearance at both ends of the drawer front is the same.

Now, carefully pull the drawer out and mark the position of the runner. Apply glue and place a weight (a brick will work) on the runner to clamp it to the bottom.

**DRAWER STOP.** That completes the guide system. There's only one last detail to complete the drawer. To stop the drawer from being pulled out too far (and falling out of the cabinet) mount a small turnbuckle catch on the inside face of the drawer back, see Fig. 8.

Then apply wax to the runner and the guide, and you've completed a very handsome, smooth drawer that's a joy to open and close.

FIGURE 8

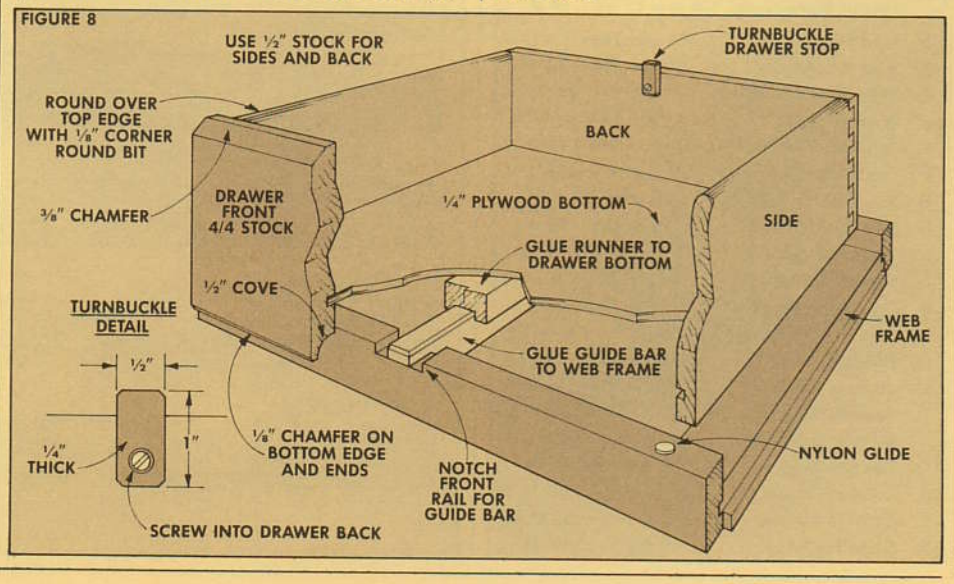

# Night Stand

## A BEDSIDE COMPANION

If you plan to build the chest of drawers shown on page 4, you'll eventually want to build a night stand to go with it. But that's not such a bad deal, at least from a woodworking standpoint.

In fact, you may want to build the night stand first — it makes an excellent warm-up project for the chest of drawers. It has all the design features of the chest, but in a smaller scale.

The basic cabinet is built exactly the same way as the chest, except it has only two web frames (one above and one below the drawers). And of course, there's only one drawer to build which makes things a lot easier.

### THE CABINET SIDES

To build this night stand, I started with the side frames, which consist of a plywood panel with edging strips on the front and back edges.

**PANEL.** First, cut two ¾" plywood panels (A) to size: 14⅜" wide by 23³⁄₁₆" long. Then to attach the web frames and bottom shelf, three grooves are cut across the inside face on both plywood panels.

**ROUT GROOVES.** To cut these grooves, I used the router table. Set up the router table to rout ¼" x ¼" grooves across each cabinet side.

The top groove is positioned 1¹⁄₁₆" down from the top edge of the plywood panel. This allows for the ¼"-long tongue on top edge, and ¹³⁄₁₆" for the thickness of the stock for the web frame. The next groove should be located so its top edge is exactly 5⅞" down from the top edge of the top groove. This allows the proper spacing between the grooves for the drawer.

The top of the third groove (for the bottom shelf) is located 2¾" from the bottom edge of the panel. After routing the bottom groove, you also need a short vertical groove for the kickboard. To cut this groove, I clamped a fence to the plywood and used a hand-held router.

**TONGUES.** After the grooves are cut, ¼"-long tongues are cut on the front, back, and top edges of the plywood panels. Since these tongues will have to fit ¼"-wide grooves routed in the edging strips, I routed a groove in a test piece to gauge the thickness of the tongues.

Then to cut the tongues, I used a ⅜" bit in the router table, see Steps 1 and 2 in Fig. 1. Set the fence to cut a ¼"-wide rabbet on both faces of the plywood. Adjust the depth of cut until the resulting tongue fits the groove in the test piece.

**SHOULDER RELIEF.** To set the panel off in its frame, I routed a ¹⁄₁₆"-wide by ⅛"-deep shoulder next to the tongue, see Step 3 in Fig. 1. This shoulder produces a small gap between the edging and the plywood, and makes a nice border around the panel.

**EDGING STRIPS.** To complete the cabinet's sides, edging strips are attached to the front and back edges of the plywood panel. The first step is to cut these edging strips to size.

**FRONT STRIP.** The front strips (B) are ripped from a piece of 5/4 stock so they're 1⅝" wide. Then cut these pieces to length so they're equal to the distance from the bottom of the cabinet side to the shoulder of the tongue on the top edge, see Fig. 1.

### MATERIALS LIST

| Overall Dimensions: 24"H x 20"W - 16"D | | |
|---|---|---|
| A | Side Panels (2) | ¾ ply 14⅜ x 23³⁄₁₆ |
| B | Side Frt. Edgings (2) | 1¹⁄₁₆ x 1⅝ - 22¹⁵⁄₁₆ |
| C | Side Bk. Edgings (2) | 1¹⁄₁₆ x ¾ - 22¹⁵⁄₁₆ |
| D | Top Panel (1) | ¾ ply 13¼ x 17¼ |
| E | Top Rails (Frt/Bk) (2) | 1¹⁄₁₆ x 1⅝ - 16¾ |
| F | Top Stiles (Sides) (2) | 1¹⁄₁₆ x 1⅝ - 16 |
| G | Top Web Fr Rails (2) | ¹³⁄₁₆ x ¹³⁄₁₆ - 18½ |
| H | Mid Web Fr Rails (2) | ¹³⁄₁₆ x 1⅜ - 18½ |
| I | Web Fr Stiles (4) | ¹³⁄₁₆ x 1⅝ - 13⁹⁄₁₆ |
| J | Web Fr Panels (2) | ¼ ply 13⁹⁄₁₆ x 16¼ |
| K | Btm Shelf Panel (1) | ¾ ply 14⅜ x 19 |
| L | Btm Shelf Edgings (2) | ¹³⁄₁₆ x 1 - cut to fit |
| M | Kickboard (1) | ¹³⁄₁₆ x 2½ - 19 |
| N | Drawer Front (1) | ¹³⁄₁₆ x 5¼ - 16⅝ |
| O | Drawer Back (1) | ½ x 4⅜ - 16⅝ |
| P | Drawer Sides (2) | ½ x 4⅜ - 13¾ |
| Q | Drawer Bottom (1) | ¼ ply - cut to fit |
| R | Drawer Guide (1) | ¹³⁄₁₆ thick - cut to fit |
| S | Drawer Runner (1) | ¾ x 1½ - cut to fit |
| T | Case Back (1) | ¼ ply - cut to fit |

### CUTTING DIAGRAM

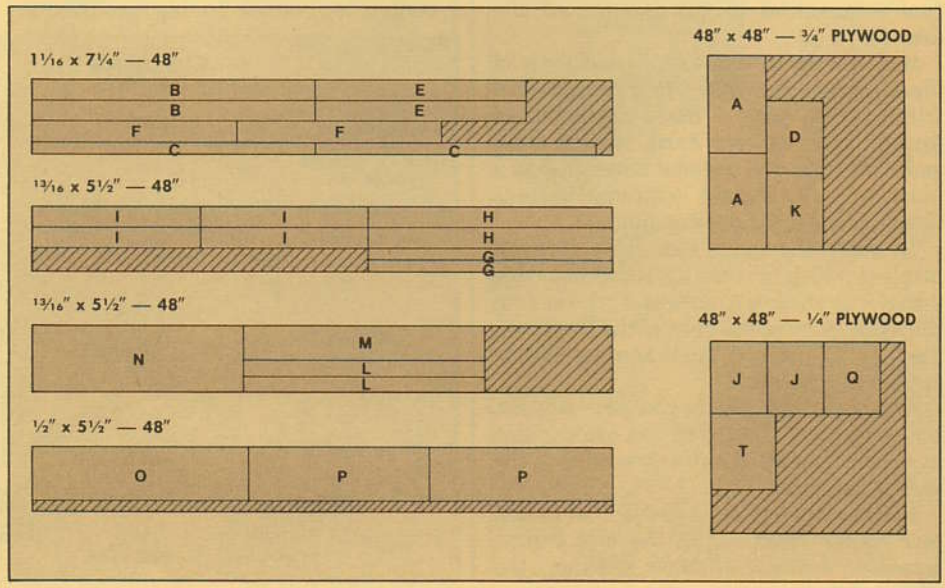

**BACK STRIPS.** The back edging strips (C) are also ripped from a piece of 5/4 stock so they're as wide as the thickness of the plywood panel, see Cross Section in Fig. 1. Then they're cut to the same length as the front edgings.

**GROOVES IN STRIPS.** All four of these strips are joined to the plywood panel by routing ¼" x ¼" grooves. On the front strips (B), the grooves are cut on the 1⅝" wide face (see Cross Section in Fig. 1), and positioned so the outside edge is flush with the surface of the panel.

The back edging strip (C) has a ¼" x ¼" groove centered on the edge of the strip. It also has a ¼"-deep rabbet on the inside back edge for the plywood back.

After the grooves are cut, the front and back strips are glued to the panels, flush with the shoulder of the tongue on the top edges.

### THE TOP FRAME AND PANEL

The frame and panel for the top of the cabinet consists of a plywood panel with edging strips on all four sides.

**THE PANEL.** The first step is to cut the plywood panel (D) to size so it's 13¼" wide and 17¼" long.

Then, as on the side panels, rout ¼"-wide rabbets on both faces of the panel to produce ¼"-long tongues — this time on all four edges. Also, cut the 1/16"-wide, ⅛"-deep shoulder next to the tongue to produce the 1/16" relief between the panel and the edging, see Fig. 2.

**RAILS.** To make the frame, rip the front/back rails (E) from 5/4 stock so they're 1⅝" wide. (Note: This width may have to be altered to make sure the top assembly is the same width as the side frame.) Then trim the rails to length to match the shoulder-to-shoulder length of the plywood panel, see Fig. 2.

**STILES.** The stiles (F) for the top are also ripped 1⅝" wide from a piece of 5/4 stock. Then they're cut to length to equal the width of the cabinet sides.

**GROOVES IN RAILS.** To attach the rails (E) to the plywood panel, rout a ¼"x ¼" groove on the inside edge of each piece, see Step 1 in Fig. 2. Position these grooves so the faces of the rails are flush with the face of the plywood panel.

**GROOVES IN STILES.** The grooves in the stiles (F) have to be stopped so they don't show through. These grooves are stopped ½" from both ends of the stile, see Fig. 2.

Before gluing the stiles to the panel I routed a second ¼" x ¼" stopped groove on the bottom face of the stile. This groove is used to attach the top frame to the side frame, see Detail in Fig. 2.

**ASSEMBLY.** Finally, the rails and stiles can be glued to the plywood panel. Then after the frame is assembled, cut a ⅝"-wide bevel on the front of the frame, see Cross Section in Fig. 2.

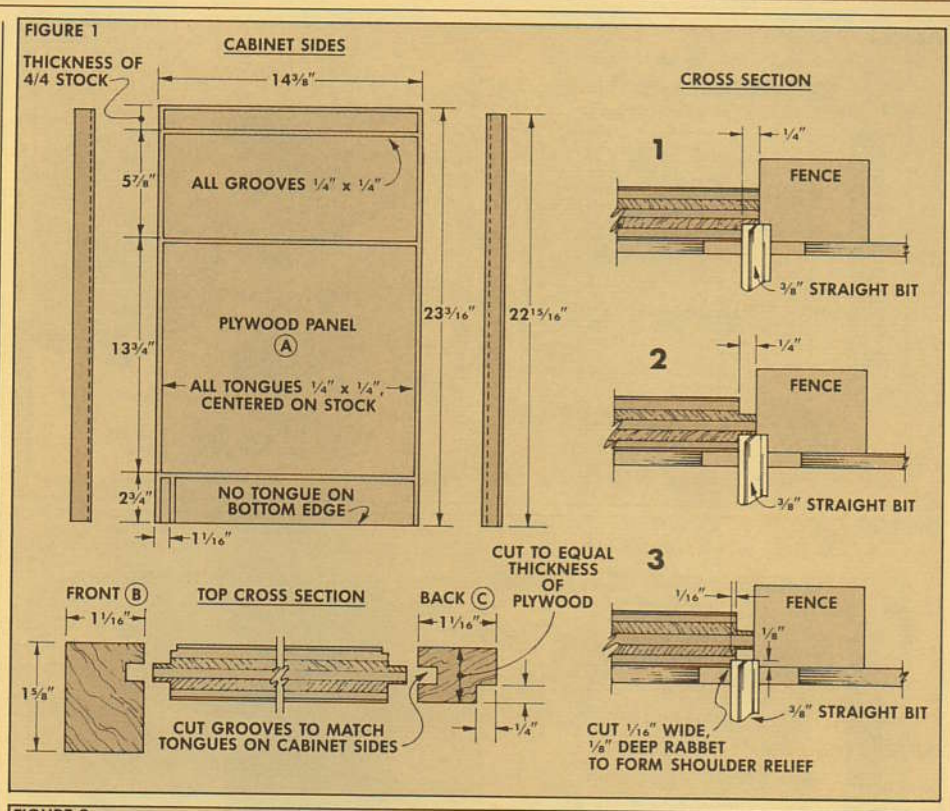


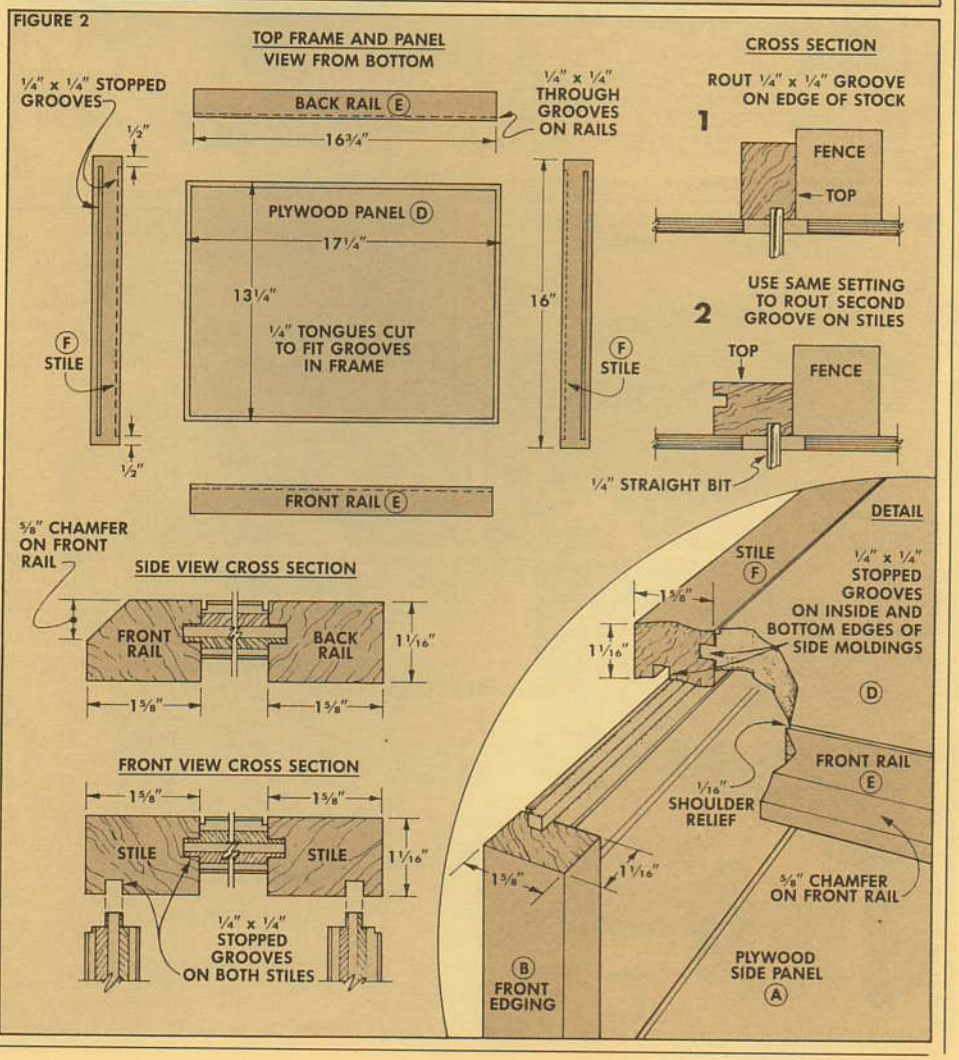

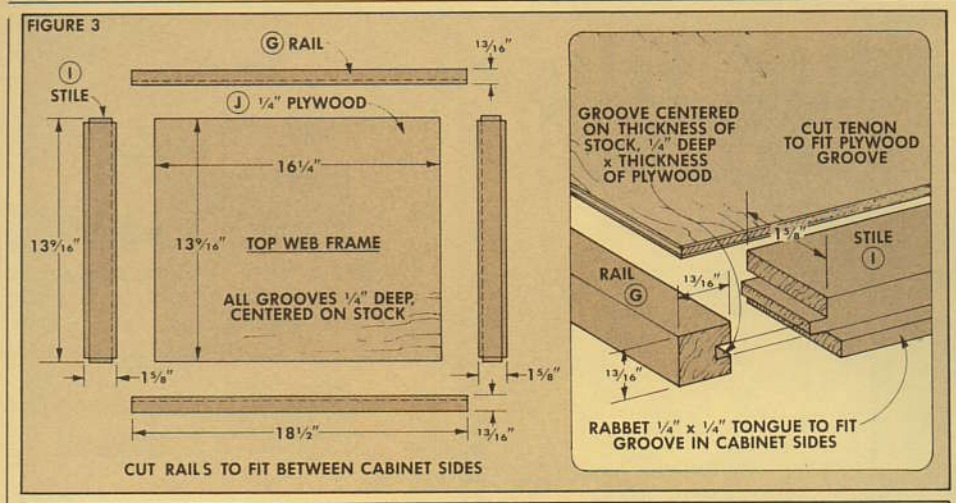


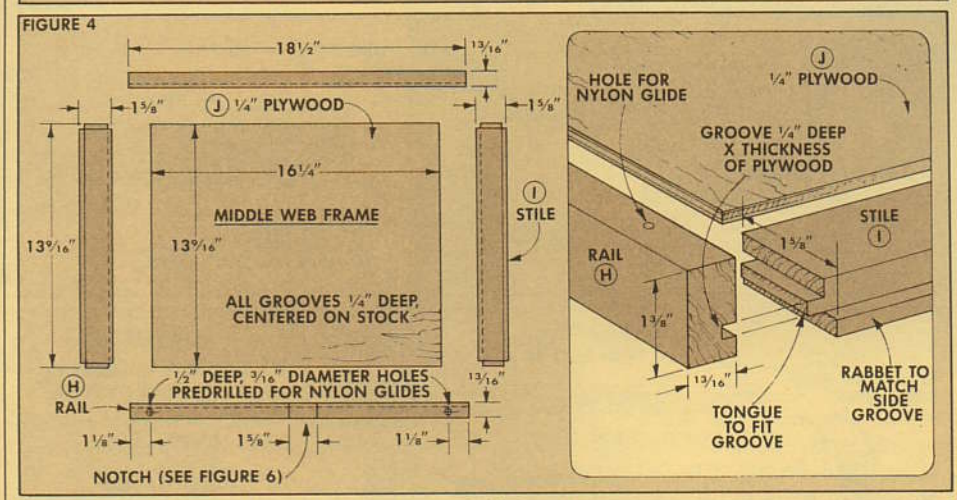


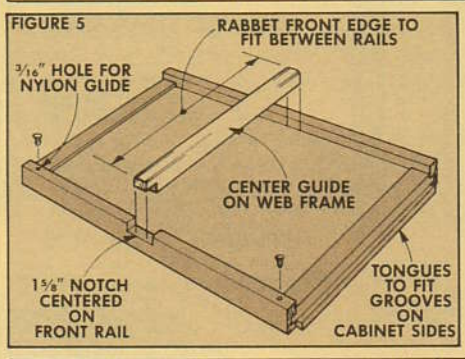


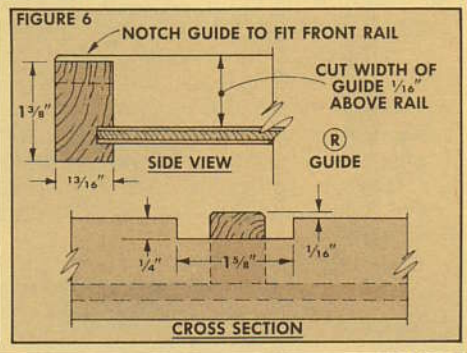


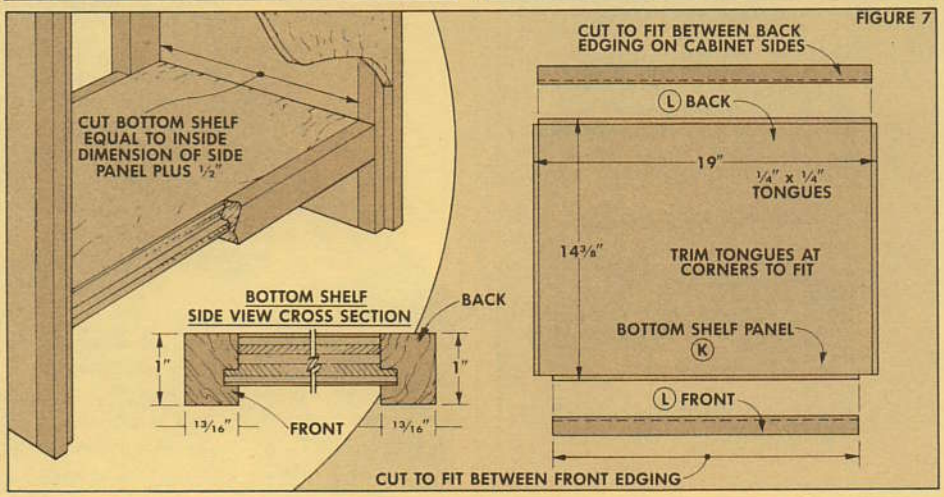


## THE WEB FRAMES

After the side frames and the top frame are complete, the two web frames and the bottom shelf can be built.

**WEB FRAMES.** The two web frames are almost identical. The overall dimensions and the length of the individual pieces are the same, the only difference is the width of the front/back rails (G and H).

**RAILS.** To get the length of the rails for the web frames, dry-clamp the top frame to the sides of the cabinet. Then measure the distance between the side frames to get the length of the rails (G and H). This should be 18½", refer to Fig. 3.

Although the length of the rails on both frames is the same, the width is different. On the top frame the rails (G) are ripped 13/16" wide (see Fig. 3), and the rails (H) on the middle frame are ripped 1⅜" wide, see Fig. 4.

**STILES.** The stiles (I) on both web frames are the same size. To find the length of the stiles, first measure from the front molding on the cabinet side to the rabbet in the back molding. Then subtract the thickness of the front and back rails (13/16" + 13/16"), and add a ½" for the ¼"-long stub tenons on the ends of the stiles. The final measurement should be 13 9/16". As for the width, the stiles are all 1⅝" wide.

**GROOVES.** To join the rails and stiles, first cut a groove on the inside edge of each piece to match the thickness of the plywood panel, see the Details in Figs. 3 and 4. Then cut stub tenons on the ends of the stiles to match the groove in the rails. Also cut a rabbet on the outside edge of the stiles to form a ¼" tongue to fit the grooves in the cabinet sides.

**NOTCH.** Before the middle frame is assembled, cut a 1⅝" wide, ¼" deep notch centered on the front rail for the drawer guide, see Fig. 6. Then drill a 3/16" hole 1⅛" from each end of the front rail for the nylon glides, Fig. 5.

**ASSEMBLY.** Dry-assemble the frames and take measurements for the ¼" plywood panels. Cut the panels to fit, and then glue the web frames together.

**DRAWER GUIDE.** After the web frames are assembled, rip a drawer guide wide enough so it's 1/16" higher than the front rail on the middle web frame, see Fig. 5 and 6. Then rabbet the front end of the guide to fit over the notch in the front rail. Glue it to the web frame so it's centered on the width of the frame.

## THE BOTTOM SHELF

The bottom shelf consists of a plywood panel with edging strips on the front and back edges.

**CUT PANEL TO SIZE.** To build this shelf, first cut the plywood panel (K) to length so it's ½" longer than the inside width of the cabinet. (The extra ½" is for the ¼"

tongues on both ends of the shelf.) Then cut the shelf to width so it's ½" wider than the distance between the front and back moldings on the cabinet sides, see Fig. 7. (Again, the extra ½" is for the tongues on the front and back edges.)

**TONGUES.** After the plywood is cut, rout rabbets on all four edges to form ¼" tongues that fit the grooves in the cabinet sides, see Cross Section in Fig. 7. Next, trim the tongues on the front and rear corners so they fit around the moldings on the cabinet sides, see Detail in Fig. 7.

**KICKBOARD.** The last step before the cabinet is assembled is to cut a kickboard 2½" wide, and ½" longer than the inside width of the cabinet. Then cut rabbets on both ends of the kickboard to form tongues that fit the grooves in the cabinet sides, see Detail in Fig. 8.

**ASSEMBLY.** To assemble the cabinet, glue the side frames, both web frames, the bottom shelf, and the kickboard together. When the glue is dry, attach the top frame.

**MOLDINGS.** Finally, cut the front and back edging strips (L) for the bottom shelf. Rip both pieces 1" wide and long enough to fit between the cabinet sides. Then cut ¼" x ¼" grooves positioned so the top edge of the molding will be flush with the face of the panel, see Cross Section in Fig. 7.

## THE DRAWER

The drawer for the night stand is similar to those on the chest: the drawer front has a concealed cove on the bottom edge. (Note: What follows is an abbreviated description of how the drawer is built. A detailed explanation is given on page 13.)

**CUT PIECES.** The first step in building the drawer is to cut the drawer sides (P) and back (O) ⅛" narrower than the opening, and to the lengths shown in Fig. 9. Then cut the drawer front (N) ¾" wider than the height of the drawer opening.

To join the pieces for the drawer, I used a dovetail router fixture to rout the half blind dovetails on all four corners. (See page 13 for detailed instructions.)

When the corner joinery is completed, cut a 45° bevel on the top edge on the drawer front. Then rout a ½" cove on the bottom inside edge to provide a finger pull for the drawer, see Fig. 9. The last step is to cut the drawer bottom to fit, and to glue the drawer together.

**RUNNER.** To complete the drawer guide system, cut a 1½"-wide drawer runner with a groove down the center that fits over the drawer guide on the web frame, see Fig. 10. Then glue the runner centered on the drawer bottom.

**FINISHING STEPS.** To complete the night stand, I routed an ⅛" chamfer on all the outside edges on the cabinet and drawer front. After chamfering the edges, I applied three coats of Deft Interior finish, sanding between coats.

FIGURE 8

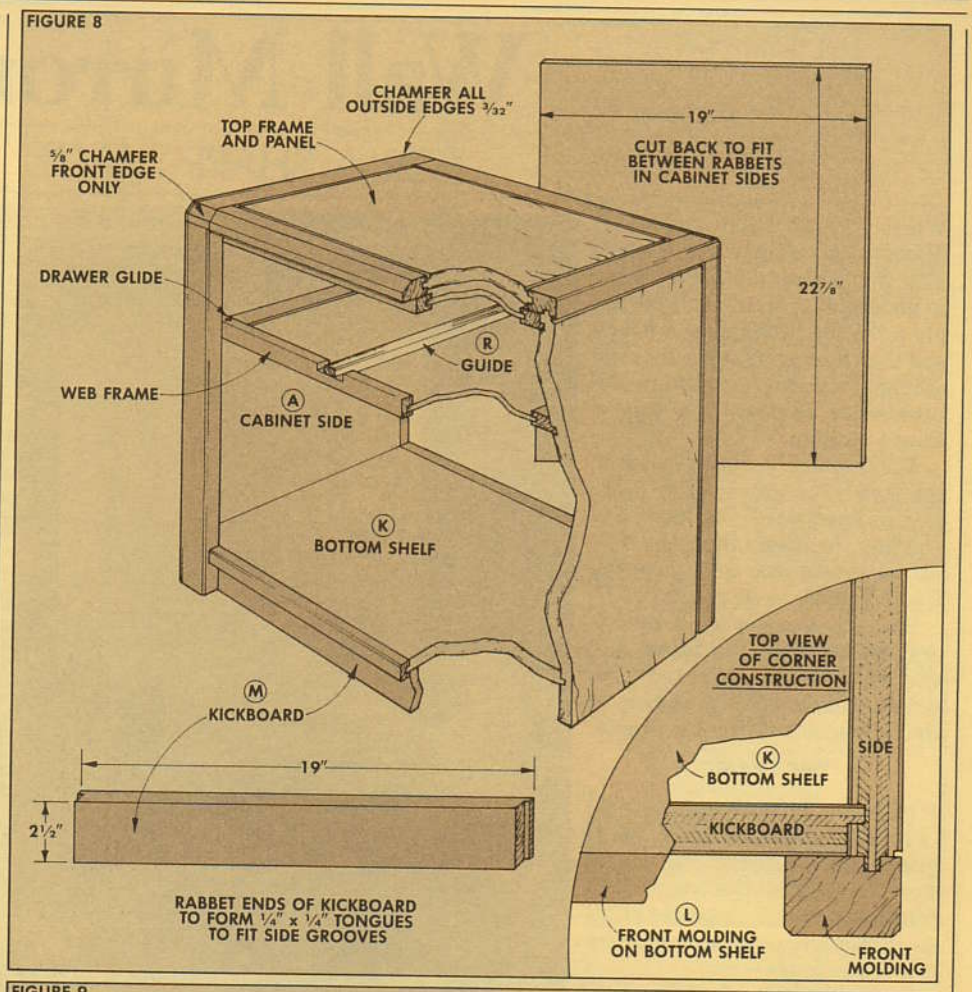


FIGURE 9

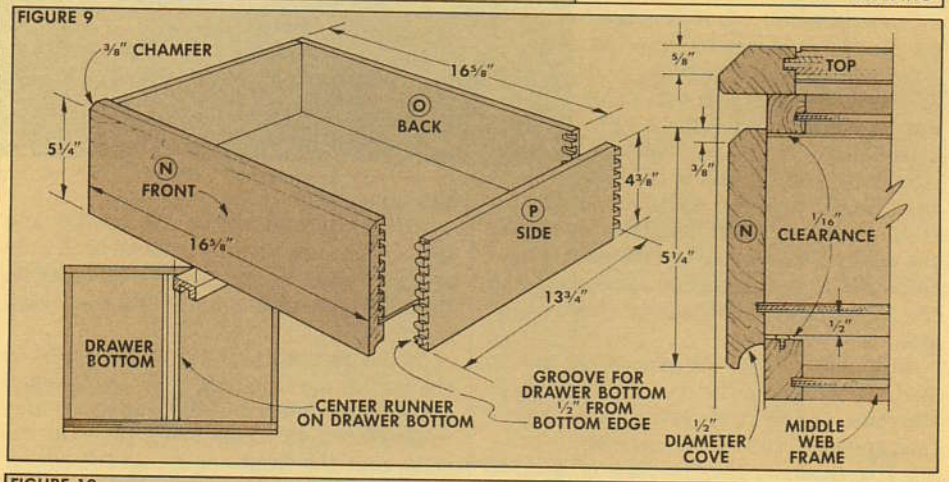


FIGURE 10

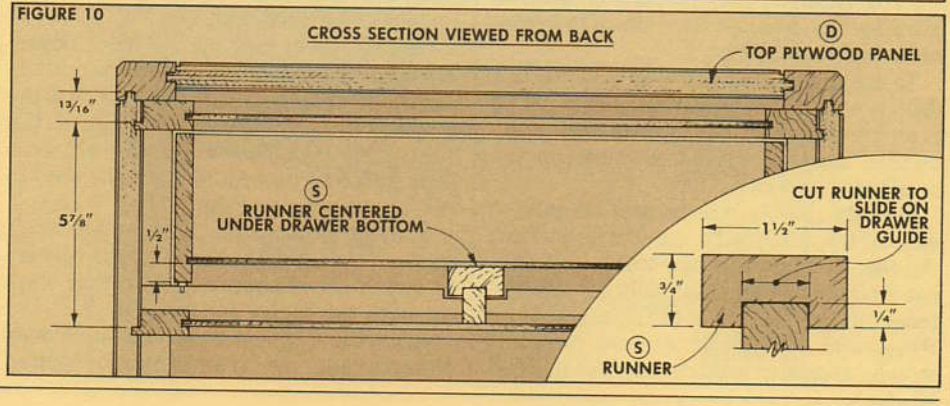

# Wall Mirror

## FOR A SHARP IMAGE

Whenever you build a chest of drawers, it's pretty much standard procedure to build a mirror to go with it. Usually this is simply a matter of building a frame and then having the mirror cut to size so it can be mounted in the back. Not so with the mirror shown at right.

The frame is designed to match the style of the chest of drawers and the headboard. But instead of building the frame first, the mirror is cut to size and then the frame is built to fit around it.

Since there are such close tolerances between the frame and the mirror, this reverse procedure eliminates any chance of the mirror not fitting the frame.

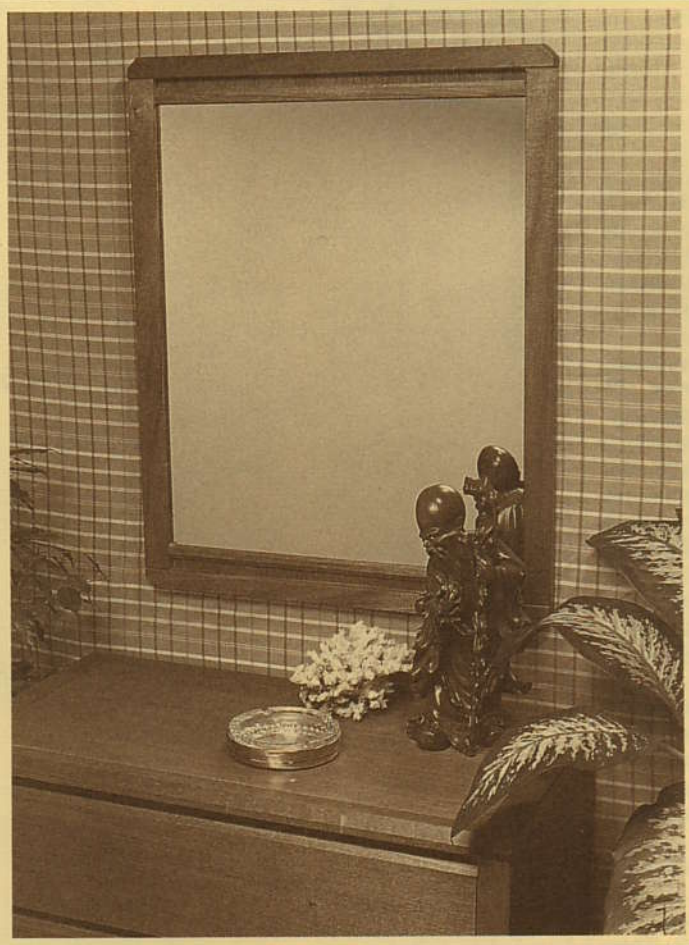

### THE FRAME

I had the mirror cut to size (21 15/16" x 26 15/16") at a local glass store. After it was cut, I went to work on the frame. The frame is simply four pieces of 5/4 stock that are joined with mortise and tenon joints.

**CUT PIECES.** The first step is to cut the frame pieces to size. The stiles are ripped 1 5/8" wide, and 3 9/16" longer than the length of the mirror (this should be 30 1/2"). Then the top and bottom rails are ripped 1 1/4" wide, and a total of 3 5/16" longer than the width of the mirror. Note: This 3 5/16" extra length accounts for the width of the two stiles (1 5/8" each) plus a total of 1/16" for expansion space between the edge of the mirror and the edge of the stile.

**MORTISES.** After the pieces are cut to size, the next step is to cut the mortises in the rails. The mortises are 3/8" wide by 1 1/8" long and centered on the edge of the rails, see Fig. 1. Also, they're only 1/2" deep to allow for the miter on the ends of the rails, refer to Detail in Fig. 1.

To cut the mortises, I used a 3/8" bit in a drill press, drilling overlapping holes to remove the waste. (This is the same method used to cut the mortises on the headboard, see page 10.)

**TENONS.** Next, tenons are cut on the ends of the stiles to fit the mortises. I cut the tenons on a table saw using a double-cut method that automatically centers the tenon on the thickness of the stock. (See *Woodsmith* No. 26 for a more complete step-by-step article on cutting slot mortise and tenon joints.)

**MITER CORNERS.** After the mortise and tenon joints are cut, the ends on both rails are mitered at 45°. Cut a 3/4"-wide miter on the outside corners of both rails, see Detail in Fig. 1.

**CHAMFER EDGES.** To soften the edges on the frame, the front edges of the rails and stiles are chamfered. (I did this on a router table with a 45° chamfering bit.) On the rails, rout the front edges and the corner under the mitered end, see Fig. 2.

On the stiles, rout all the front edges. Then I also wanted to chamfer the outside corner, see Fig. 3. The problem is that the tenon on the end of the stiles is right in the way of the pilot on the chamfer bit. So a little different procedure has to be used to chamfer the ends of the stiles.

Instead of using the 1/2" chamfer bit, I used a sharp chisel to shave off the corners to match the chamfered edges that were cut with the router bit, see Fig. 3.

After the edges of the frame have been chamfered, the frame can be glued together and checked for square.

**RABBET.** When the frame is assembled, a 3/8"-wide rabbet is routed on the inside back edge for the 1/4" plywood back. To rout this rabbet, I used a 3/8" rabbet bit in a hand held router, see Cross Section in Fig. 5.

Shop Note: I usually cut rabbets on a table saw to prevent the shoulder from chipping out. But since the rabbet for the plywood back has to be stopped on both ends of the rails, it's much easier to rout with a hand held router.

The only problem with using a router to cut the rabbet is that the shoulder at the bottom of the cut usually chips out — and this is the shoulder that will show on the front of the frame.

To get a clean cut while routing, set the depth of cut equal to the thickness of the plywood back. Then make a light scoring pass on the inside edge moving the router in a counter-clockwise direction, which is the opposite direction you're supposed to rout, see Fig. 4.

By routing in the "wrong" direction, the rotation of the bit tends to push itself away from the piece. So you really have to concentrate to keep the bit in contact with edge along the entire length of the piece. This method produces a very smooth cut on the bottom shoulder.

After the initial scoring pass, move the router in the normal clockwise direction to complete the rabbet. Then use a sharp chisel to square up the round corners of the rabbet, see Fig. 5.

**CUT BACK.** Now the 1/4" plywood back can be cut to fit in the rabbet on the back of the frame. Then glue it in place.

### THE HOLDING STRIPS

To mount the mirror to this frame, two holding strips are used to grip the top and bottom edges of the mirror. These strips are, in turn, screwed to the plywood back, see Fig. 6.

**HOLDING STRIPS.** The first step is to cut the holding strips to size. Rip the strips from a piece of 13/16" stock so they're 7/8" wide, and 5/8" thick. Then cut them about 1" longer than the inside dimensions of the frame. (They're trimmed to final length later.)

**CUT GROOVE.** To attach the strips to the

mirror, cut a groove the same thickness as the mirror (⅛") down the edge of the strips, see Fig. 6. (Most carbide-tipped saw blades cut kerfs exactly ⅛" wide.) Cut this kerf ¼" deep and centered on the edge of the strip, see Step 2 in Fig. 6.

**CHAMFER EDGES.** After the groove is cut, the front edges of the strips are chamfered. Rout a ⅜"-wide chamfer on the top edge of the strip, see Step 3 in Fig. 6. Then rout small ⅛"-wide chamfer on the bottom edge, see Step 4 in Fig. 6.

**ASSEMBLY.** Now, to mount the mirror and the strips in the frame, cut the holding strips to length to fit snugly between the stiles on the mirror frame.

Then slide the strips over the edges of the mirror and position it in the frame so there's equal spacing between the holding strips and the top and bottom rails.

Mark this position and remove the strips from the mirror. Then clamp the strips alone to the plywood, and drill pilot holes through the plywood back for #6 x ½" woodscrews, see Fig. 6.

**FINISH.** Before mounting the mirror, I applied three coats of Deft interior finish to the frame and the holding strips.

Now the mirror can be installed. I placed a couple pieces of cardboard in between the mirror and the plywood back to support the center of the mirror. Then the holding strips can be screwed in place to hold the mirror in the frame.

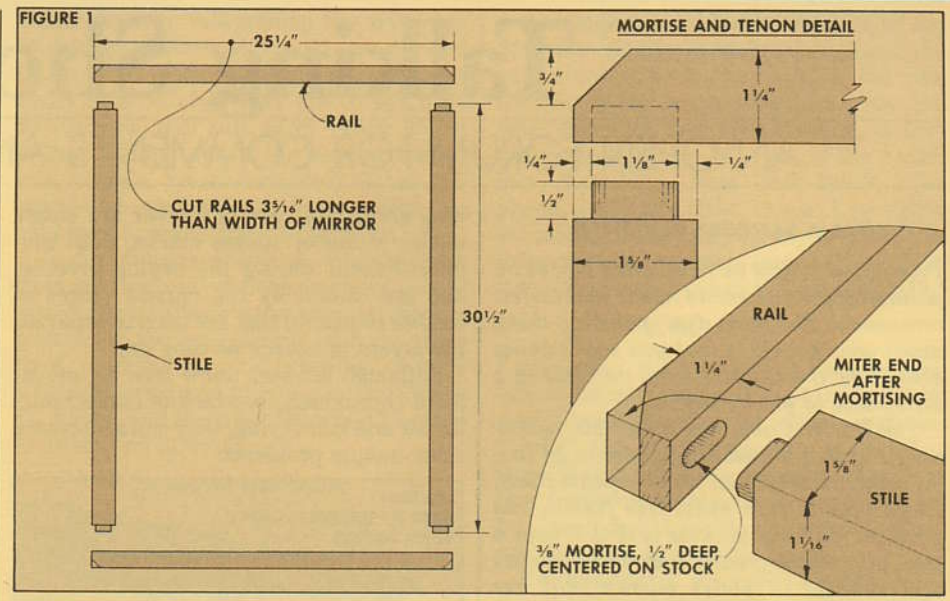


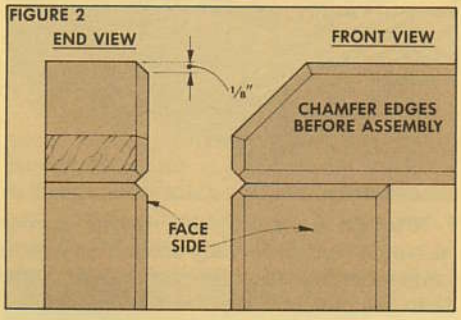


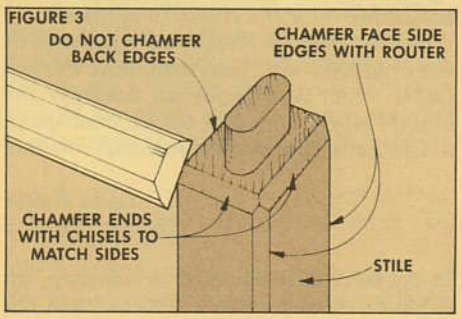


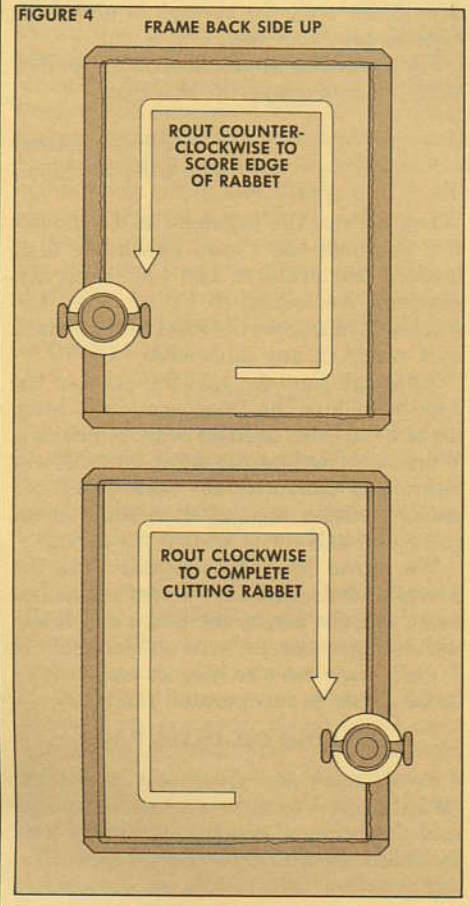


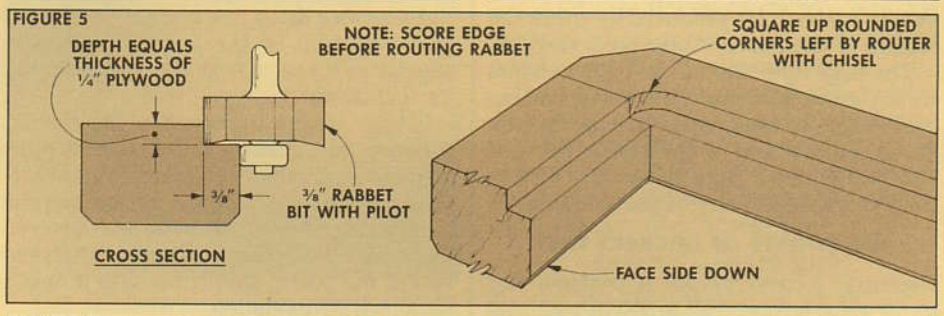


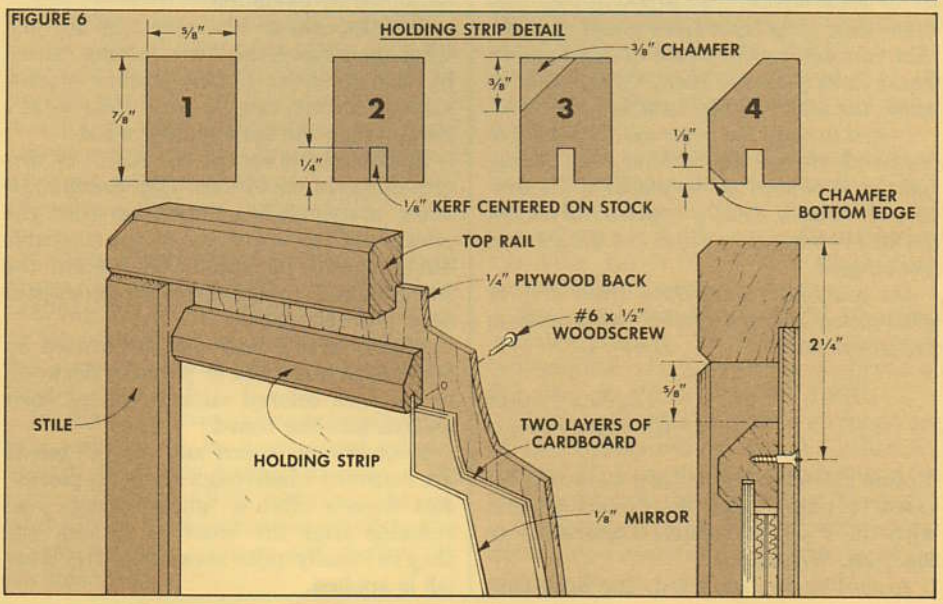

# Talking Shop

## AN OPEN FORUM FOR COMMENTS AND QUESTIONS

### PALM SANDERS REVISITED

*I read your article in* Woodsmith *No. 33 on palm sanders and would like to make a few comments. The most disappointing thing about your article is that you say nothing about how the sanders sand and this is a dis-service to your readers.*

*The Porter-Cable has a flexible rubber coupling that allows the sander to go in a 5/64" random orbit that never repeats itself, which results in a swirl free finish. The problem with my Makita is that it uses a steel pin, which creates a circular motion and results in swirl marks that are noticeable after the finish is applied.*

*Nearly every professional refinisher in my area uses the American-built Porter-Cable #330. Maybe for an amateur the Makita might work out, but why not spend $15.00 extra and get professional results?*

*Lynn Keiter*
*Tampa, Florida*

In the tests we conducted in our shop, we found no distinguishable difference in the quality of the finish produced by either the Makita or the Porter-Cable palm sanders.

The only time any of the palm sanders we reviewed produced visible swirl marks were when we used coarse grit sandpaper. When we switched to medium or fine grit sandpaper, there were never any visible swirl marks using any of the sanders.

### THE GHOSTS OF STICKERS PAST

*Recently, I came across a problem I've never seen before. The problem was that there were very light lines about 1" wide, that ran across the width of my lumber. These lines occurred every three feet or so along the length of the lumber.*

*I tried to sand the lines out, but it got to the point where I would have been changing the thickness of the pieces if I'd continued. When I finally applied the finish, the lines were more apparent than I had anticipated.*

*Do you know what these lines are, or what causes them, and what can be done to prevent them?*

*Thomas Phipps*
*Chicago, Illinois*

To find out what these lines were, we decided to talk to Jim Ward, technologist with the Forest Products Laboratory in Madison, Wisconsin.

According to Jim Ward, the lines running across the face of lumber are either sticker stains or sticker marks. Both conditions occur during the drying process, and are caused by the narrow pieces of lumber (stickers) that are used to separate the layers of boards as they dry.

Although stickers allow free air movement throughout the stack of lumber during air and kiln drying, they can also create some unique problems.

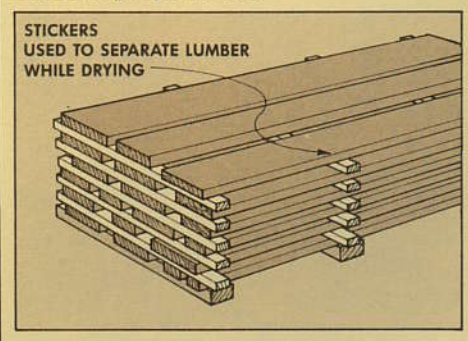


**STICKER MARKS.** Sticker marks appear as narrow bands (usually about 1" in width) across the face of a board that are *lighter* than the rest of the piece.

As lumber dries, it's normal for the exposed surface of the boards to darken slightly as it reacts with the oxygen in the air (oxidation).

Sticker marks occur when the contact between the sticker and the board is tight enough to prevent oxidation from occurring on the area where the sticker and the lumber meet. This causes the area covered by the sticker to appear lighter than the rest of the board, simply because it hasn't darkened by oxidation.

**STICKER STAINS.** Sticker stains are just what their name implies — stains caused by the stickers. Unlike sticker marks, sticker stains can be any color that's *darker* than the surrounding wood.

Sticker stains can be the result of several different conditions. One condition is when moisture is trapped between the sticker and the board, creating a favorable environment for molds that stain the wood. This type of stain often penetrates deep into the board.

Sticker stains may also be caused by stickers that are wet or partially decayed, or by dark colored stickers whose color leaches into the board.

Most sticker stains and sticker marks are removed when rough lumber is planed. But there's often a "ghost" image that remains after the board is planed, and they're usually quite noticeable after a finish is applied.

The only way to eliminate the problem of sticker stains and sticker marks is to avoid them from the start. Carefully inspect each piece of surfaced lumber, and look for the faint bands that run across the width of the board.

### STILL TOO FAT

*Some time ago, I bought a Freud 8" adjustable dado blade. To date, I've used the tool exclusively on my 12" Craftsman radial arm saw. On this saw, it performs well, giving a smooth cut and runs with little vibration.*

*The other night, I was re-reading* Woodsmith *back issues and came across your discussion in* Woodsmith *No. 23 about the new 8" adjustable dado from Freud. The discussion was about how it would not fit some table saws. According to your comments, Freud has re-milled the sides of the new 8" dado so that they will fit on any table saw.*

*This isn't quite true. I have one of the new, re-milled 8" dado blades and it will not fit safely on my 10" Craftsman table saw. The saw shaft extends through the dado blade only far enough to allow one turn on the arbor nut.*

*I don't think a wobble dado blade, or any blade, is safe to operate this way.*

*William Vasher*
*Gibralter, Michigan*

When we ran the segment in *Woodsmith* No. 23 about the Freud adjustable dado blades, the problem had just been discovered. According to Freud, they had started to mill down the sides of the 8" dado so it would fit any table saw.

Although they did mill the sides of the dado to reduce the thickness of the body, it's still too thick to fit on some table saws. When we tried to mount it on both our Sears and Rockwell 10" table saws, we couldn't rotate the nut more than about one-and-a-half turns around the arbor.

We agree with Mr. Vasher that the Freud 8" dado blade is fine for radial arm saws. But for use on the Sears and Rockwell 10" table saws, it's our opinion that the 8" dado blade can't be secured well enough to the arbor to be operated safely.

### SOAKING OIL-FILLED RAGS

*I agree with Mr. Lauren's comments* (Woodsmith *No. 31) on properly storing and disposing of oil/varnish-soaked rags in closed containers filled with water. But my question is how can we economize?*

*After all, good wiping rags are no longer inexpensive, especially if they're disposed of after every use.*

*If I understand spontaneous combustion correctly, exposure to air is required for ignition. With this in mind, my question is: Can we safely store our oil-filled rags in a closed container filled with mineral spirits (which eliminates all but a very small amount of air), so that they can be wrung out and used again later?*

*Robert Westra*
*Rolling Meadows, Illinois*

Because of the potential problems associated with both spontaneous combustion and the use of mineral spirits, we decided to call Mr. Lauren (Executive Director of the Coating Research Group) to get his opinion on soaking oil-filled rags in a mineral spirits bath.

According to Mr. Lauren, soaking rags in a closed container *filled* with mineral spirits will prevent spontaneous combustion from taking place because of the lack of oxygen in the container. He also mentioned that the same general conditions exist when oil-filled rags are submerged in water until they can be thrown away. Again, the key to preventing spontaneous combustion from occurring is the lack of oxygen.

Although this practice will prevent spontaneous combustion, Mr. Lauren cautioned that it may create more problems that it cures. The biggest problem is that when the rags are wrung out and reused, they're still saturated with a very flammable solvent. And when combined with the remaining problem of spontaneous combustion (from the finish still in the rags), this poses a double threat.

It's Mr. Lauren's opinion (and ours), that the potential hazards of reusing old rags that have been soaked in mineral spirits are too great to justify saving a few dollars on the cost of rags.

### ONLY A FEW DOLLARS MORE

*I just finished reading your article on routers and your recommendations. Unfortunately, I feel that you made a mistake in choosing to reveiw only those routers that were under $200, and in excluding plunge routers.*

*Under these parameters, both the Makita and the Ryobi plunge routers were not reviewed. They're both available for under $200 from local discounters.*

*I have used many types of routers over the years and have seen the problems associated with bit changing and depth adjustments. I now have a Makita plunge router and have found it a dream to use.*

*Richard Herzog*
*Exeter, New Hampshire*

When we were researching the article on routers in *Woodsmith* No. 31, we decided to limit the price range of the routers to under $200. We felt there had to be a limit somewhere, and this price range would include all but a few of the heaviest industrial models. We also decided to use full suggested retail price because it was the only way to make fair comparisons.

As for plunge routers, we exclude them from our first review because there simply wasn't room to review their special characteristics in the same article with the standard routers. We are planning to do a follow-up article on plunge routers (Makita, Ryobi, and the new Black and Decker) in an upcoming issue.

### ALMOST AN INCH

Recently we received a letter from a reader who had been having problems finding two 12" rules with identical calibrations. After checking dozens of rules against each other at a local hardware store, he finally found two that actually matched.

We had the same problems in our shop until we purchased a 12" rule manufactured by the L.S. Starrett Co. This rule is designed to meet engineering standards, and like all Starrett tools, it has been a benchmark for excellence for years.

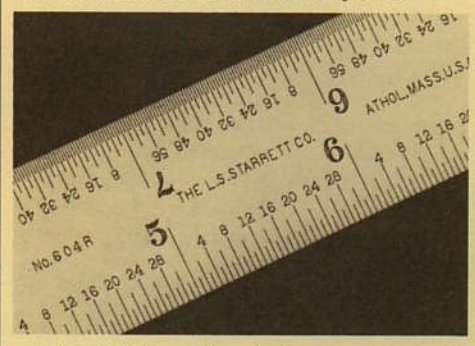


The 12" Starrett rule is square at both ends, which makes it exceptionally handy for all sorts of measuring tasks. (It's the only rule I would use to set the rip fence on a table saw.) The calibrations are etched onto a high-quality, satin-finish steel, and are very easy to read. Even my tired old eyes can easily read the 1/64" scale. (Each edge has a different scale: 1/8", 1/16", 1/32", 1/64".)

Unfortunately, Starrett rules are hard to come by, and expensive (prices range up to $20 for the #604R 12" rule we use). None of the wood-working catalogs carry it — but it can usually be found at engineering supply stores.

We did come across a less expensive rule that appears to be a good substitute. Garrett Wade has decided to carry a 12" rule in their 1985 catalog (stock #39N08.01) that's almost identical to the Starrett rule in accuracy and clarity, yet it's only $9.95.

Although we still highly recommend the Starrett rule (if you can track it down), the best alternative we've found is the rule Garrett Wade is carrying. To order the rule, check the new 1985 Catalog, or contact Garrett Wade, 161 Ave. of the Americas, New York, New York 10013. Telephone: 1-800-221-2942. (Note: Lee Valley in Canada is also carrying the 12" rule. For information, contact Lee Valley, 2680 Queensview Dr., Ottawa, Ont. K2B 8J9.)

### ROUTERS

*I agree that the Sears' idea for changing bits on its new router is seemingly a good one. Unfortunately, the actual part that "locks" the shaft after the router has stopped is made of an inferior alloy. This part fractured on my router rendering the total mechanism for changing bits useless, and the shaft now spins freely.*

*Fortunately, I removed the malfunctioning part before it completely broke apart sending a shard of metal into the router's motor and possibly destroying it. I now use a two wrench system — vise grips to hold the shaft and the cheap stamped steel wrench to loosen the collet nut.*

*Robert Balcom*
*Rensselaer, New York*

We've had the same problem with one of our Sears routers, and it's aggravating to say the least. It's problems like this that make us recommend buying an industrial quality router if at all possible.

Industrial routers are built with heavier duty parts, and they'll last much longer than home use versions. And they're really no more expensive in the long run, if you take into consideration having to replace a home version after it goes bad.

### SAMPLE LUMBER KITS

In the March 1984 issue of *World of Wood* — a publication of the International Wood Collectors Society (IWCS) — we found something being offered that we occasionally have requests for . . . sample wood kits.

Each kit contains 29 different species (common native and foreign woods), labels and information on their properties and characteristics. Each sample is surfaced on two sides, and is 1/2" x 3" x 6" (which is the standard size for wood collectors).

The sample wood kit costs $15.00, which includes postage. To order, or for more information, contact: Bruce T. Forness, P.O. Box 46, Chaumont, NY 13622.

*World of Wood* is published for members of the International Wood Collectors Society. If you would like more information on how to join the IWCS and become a subscriber to *World of Wood*, contact the Secretary-Treasurer Bruce Forness at the address above.

# Sources

This page is usually reserved for Sources — a listing of the hardware and supplies used on the projects shown in the issue. But this time we used only one piece of hardware: the nylon glides that provide a bearing surface under the drawers.

Nylon glides (also called stem bumpers) can be purchased from the Woodworkers' Store catalog, 21801 Industrial Blvd., Rogers, MN 55374. Cat. No. D3503, 67c for 10 glides.

### SHOP NOTES

Although hardware was not a problem with any of the projects, there were some interesting challenges from a woodworking standpoint. We thought we would use this space to talk about the techniques used to solve some of these problems.

### CUTTING TENONS

One of the problems I had was cutting tenons on the ends of the pieces for the headboard (see page 10). This is usually just a matter of making sure the tenon is cut to the right size so it fits the mortise.

But on the pieces for the headboard, I ran into what might be considered a mechanical problem. Both of the pieces that have tenons (the uprights and middle rail) are long and rather heavy which makes them very awkward to work with.

The length of these pieces makes it very difficult to use a typical tenon-cutting jig. (The pieces have to stand on end in this jig, and because they're so long they tend to wag around when the jig is moved to make the cut.)

Instead, I laid the workpieces flat on the table saw and made multiple passes to form the tenon. However, even this method presents a problem.

Because of their length and weight, the workpieces tend to twist or pivot off the miter gauge. To solve this problem, it helps to attach a long fence to the miter gauge to support the workpiece for its entire length, see drawing.

Then the tenons can be cut by holding the workpiece firmly against the fence and making multiple passes over the blade. (A complete description of this method for cutting a mortise and tenon is given in *Woodsmith* No. 26.)

### CUTTING PLYWOOD TO LENGTH

I used this same fence to help cut the piece of plywood used on the headboard. The problem with cutting this plywood piece to final size is actually twofold. First it's a long and wide piece that's difficult to handle. And to make matters worse, it has to be cut to very close tolerances to fit tight in an opening in the frame.

To make this cut, I used the following procedure. First, I cut the plywood to rough length — about 1" longer than needed. Here again I used the fence on the miter gauge to help guide the plywood.

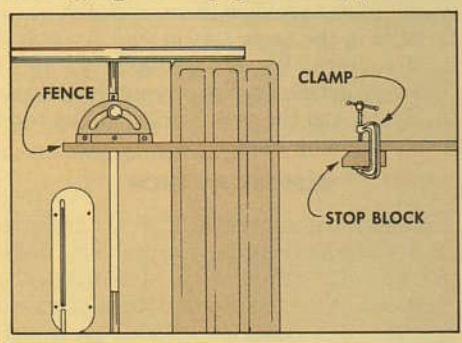


After it's cut to rough length, mark the final length on one edge. Then, with the table saw turned off, place the plywood against the fence, push it up to the blade, and line up the mark with one tooth on the blade.

When the cut is lined up, clamp a stop block to the fence at the other end of the plywood. Then as the plywood is fed through the blade, gently push it so it's tight against the stop.

This pressure against the stop block produces a steady hold on the workpiece so the blade cannot force it out of line. (Sometimes the rotation of the blade pulls or pushes the workpiece out of line.)

### CLAMPING LONG PIECES

The headboard seemed to present more than its share of problems. I ran into another problem during the gluing and clamping stage. In order to clamp the middle rail between the two uprights, you

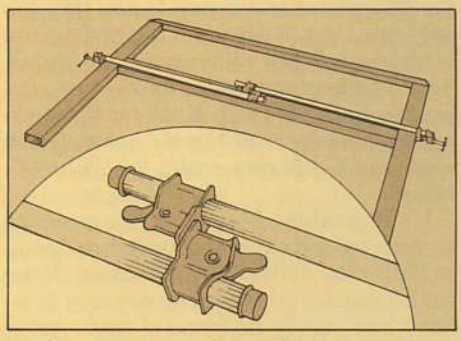

need a very long clamp. Lacking a clamp long enough, I used two shorter clamps, interlocking them to get the length necessary.

### PLIANT WOOD VENEER

I have a small confession to make. Throughout the articles on the chest, the night stand, and the headboard, I mentioned using hardwood plywood to build the projects.

That's not entirely accurate. When we originally designed these projects, we intended to build them out of oak. then at the last minute, we decided to use Honduras Mahogany instead.

The only problem is that Honduras Mahogany is not available as plywood. So, what we had to do was make our own "plywood" using flexible veneer and high-density particle board.

Flexible veneer is not your ordinary veneer. This stuff is incredible. It's only 1/64" thick (which makes it very flexible) and it comes in book-matched sheets that are mounted to a thin paper backing.

To mount flexible veneer, first cut the particle board to rough size (about 1" larger than needed in both dimensions). Then cut the flexible veneer to fit the particle board. (This veneer can easily be cut with a scissors.)

The recommended procedure to mount the veneer is to brush contact cement on the particle board and the veneer. This can be a bit of a mess. We've found this task is much easier with a paint roller.

I buy the cheapest short-nap paint roller I can find to spread the contact cement. The roller puts down a thin even coat, and yet it's cheap enough so that when I'm done I just throw it away.

**IRON-ON ADHESIVE.** Another method for mounting flexible veneer is to use a relatively new product: hot-melt glue sheets. These are literally sheets of adhesive mounted to a peel-off paper backing. (It's the same type of adhesive found on the back of iron-on edging tape.)

To use this adhesive, cut it to the same size as the flexible veneer, placed in on particle board, and place the veneer on top. Then use a household iron to heat the adhesive to the melting point, and roll the veneer down as adhesive cools.

A 3'x2' sheet of this hot-melt adhesive costs $2.59, which may seem a little expensive. But I've found that in some cases (particularly on small projects) it's less costly than contact cement.

You can cut hot-melt sheets to the exact size you need so there's almost no waste. With contact cement, I usually buy a can, use part of it, and the rest goes to waste sitting around for months before the next project.

**SOURCES.** The hot-melt glue sheets (as well as a variety of flexible veneers) are available from Bob Morgan Woodworking Supplies, 1123 Bardstown Road, Louisville, KT 40204. Phone (502) 456-2545.